Nordpeis

SA-00009-000 Door Saturn set

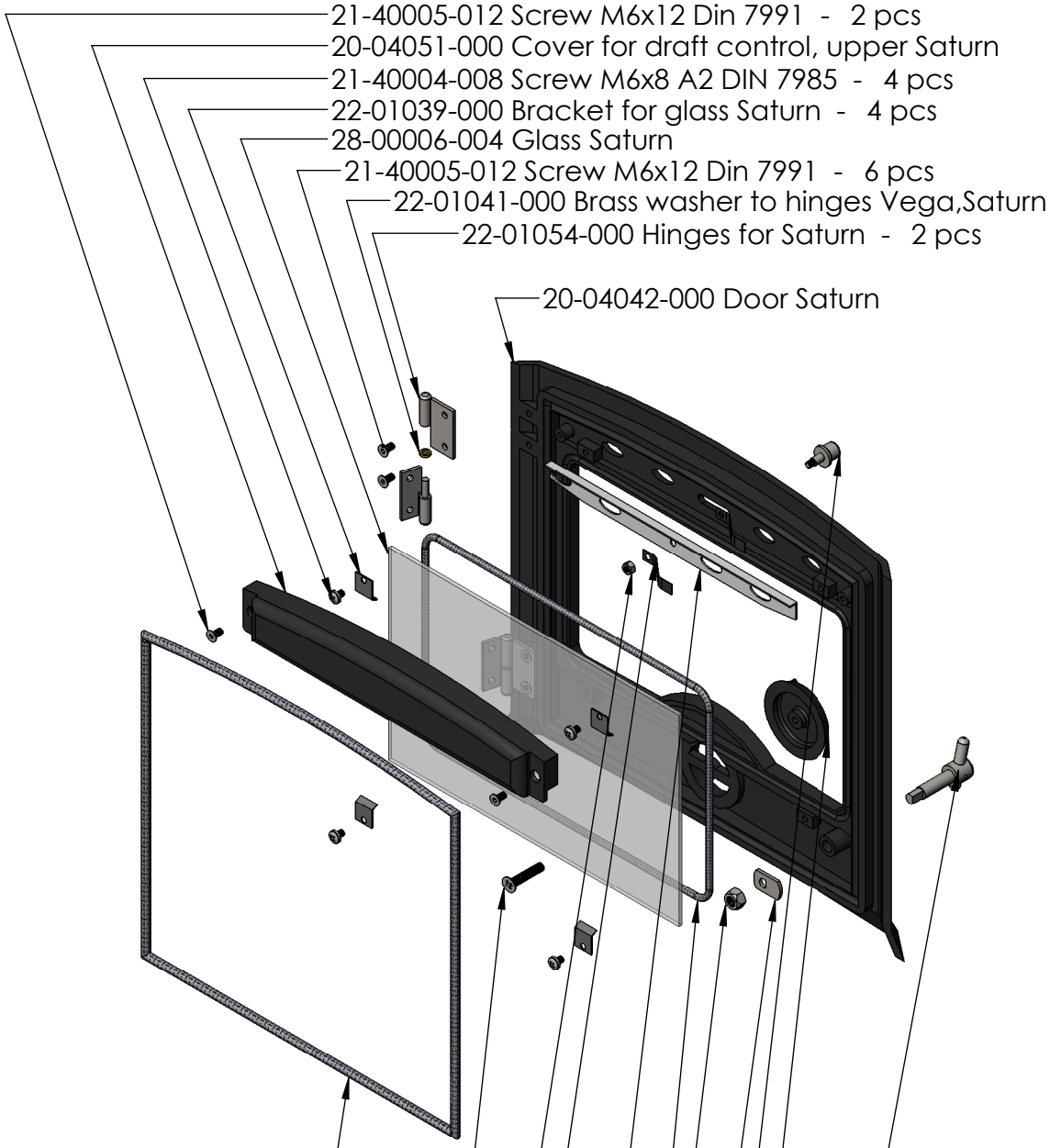

04-26413-000 Fire rope fi10 - 1,6m
21-40008-040 Screw M8x40 DIN 965
21-00001-006 Lock nut M6 Din 980V
22-01060-000 Spring plate Saturn, Vega - 2 pcs
22-01028-000 Draft control, upper Saturn
04-00350-600 Textile glass seal 6mm - 1,2m
21-00001-010 Lock nut M10 DIN 980V
22-01055-000 Lock plate Saturn
22-04080-002 Handle, draft control upper stainless steel Saturn Vega
20-04048-000 Draft control, lower Saturn
22-01052-002 Handle bolt Saturn, Vega stainless steel

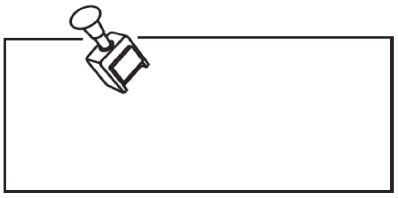

Weight netto: 10.80 (kg)