Nordpeis

AF-BOX00-100 Nordpeis Box N-20A fastening parts

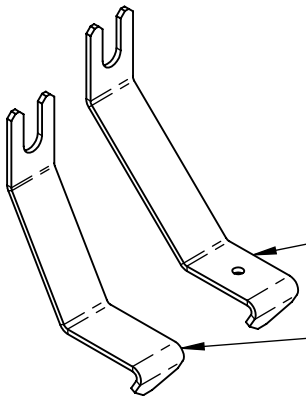

22-BOX00-140 Corner support

22-BOX00-130 Support

22-BOX00-350 Bended plate 4 pcs

21-40009-013 Screw 4,2x13 DIN 7504M 2 pcs

21-30004-016 Screw M6x16 Din 933 4 pcs

21-30001-050 Screw M5x6 ISO 7380 ZN 8 pcs

21-50001-018 Washer fi6x18 Din 9021 22 pcs

21-00000-006 Nut M6 Din 934 18 pcs

21-30001-012 Screw M6x12 Din 912 2 pcs

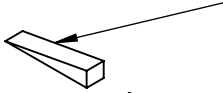

24-00KLN-000 Plastic wedge 38x8 mm 2 pcs

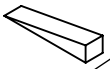

21-70000-050 Allen key 5

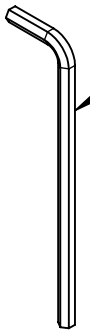

21-70000-030 Allen key 3

Glove white - 2 pcs

24-00020-010

VERSION: **Q0**