IA-00N36-162 Replacment door with two lock N-36V chrome set

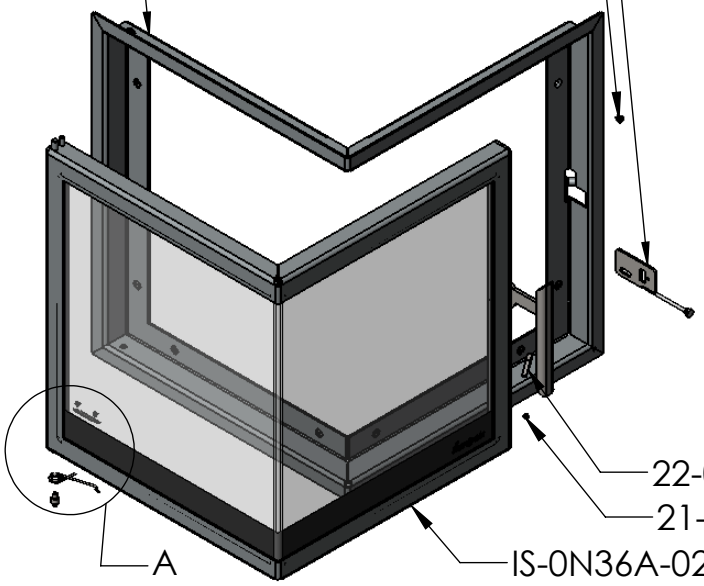

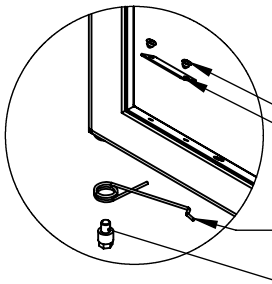

DETAIL A
SCALE 1 : 5

VERSION:

Weight net: 16.11 (kg)