IA-00N36-201 Replacement frame_door chrome set_Spartherm version

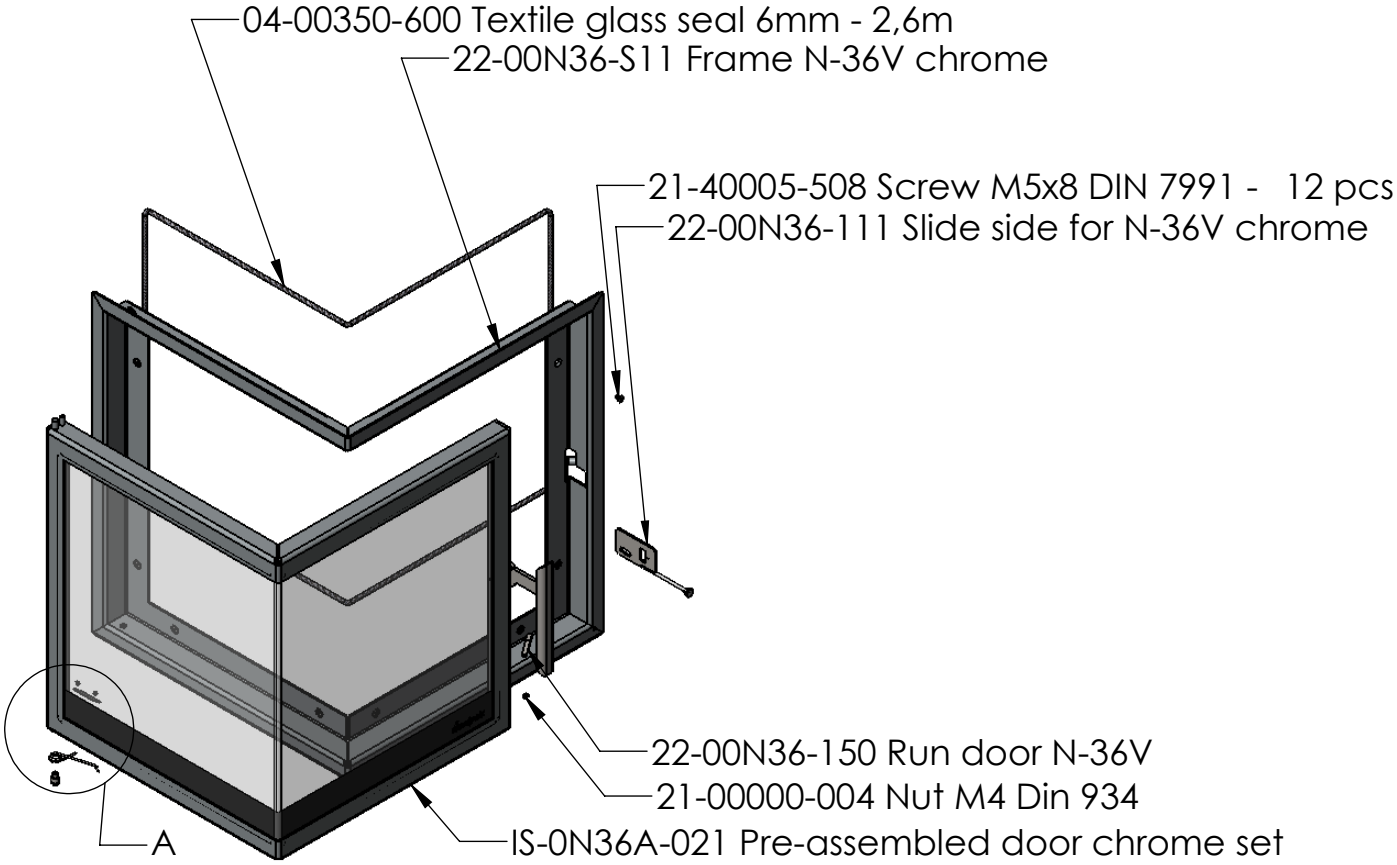

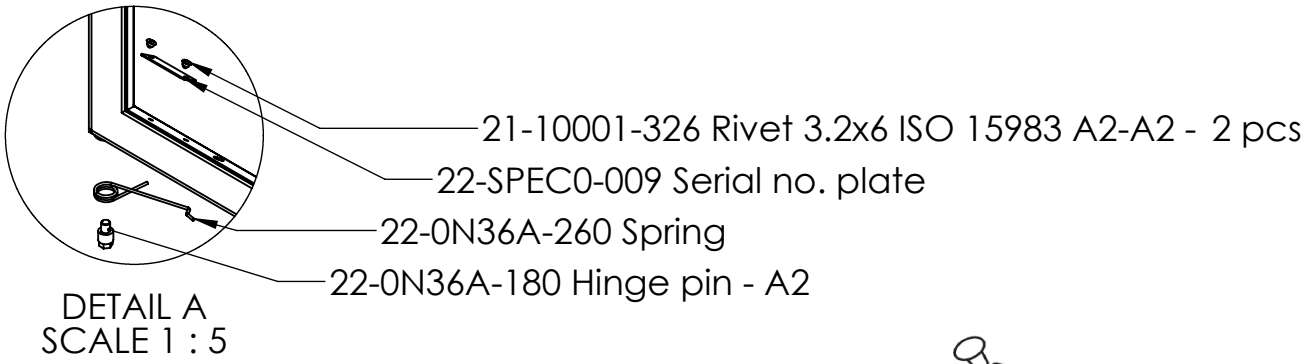

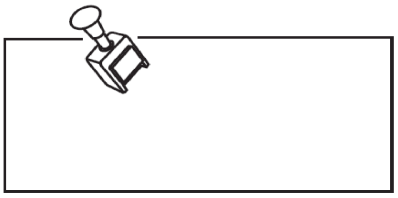

Weight net: 22.23 (kg)

VERSION: Q0