IA-00N24-013 Door with door handle N-24 anthracite set

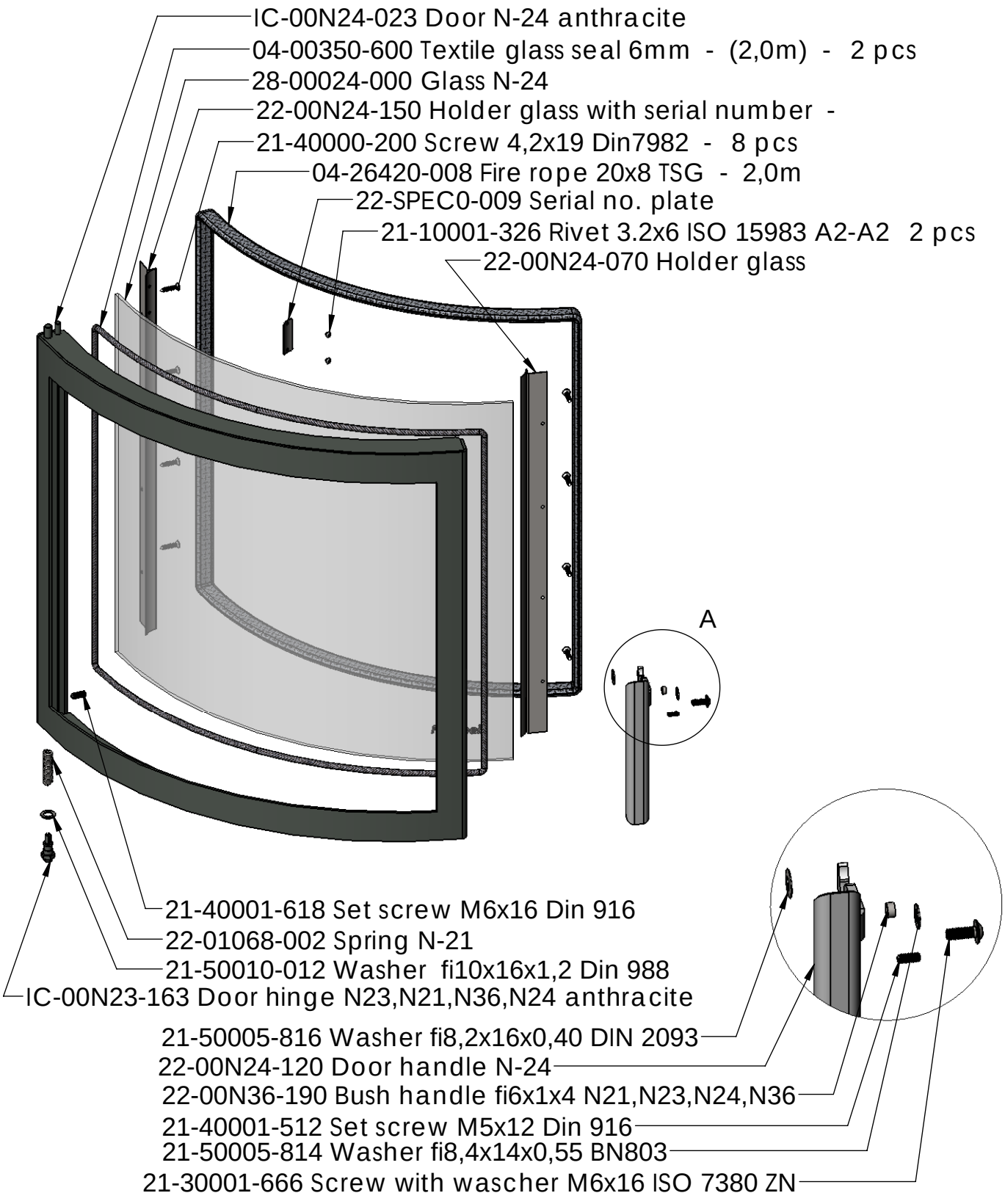

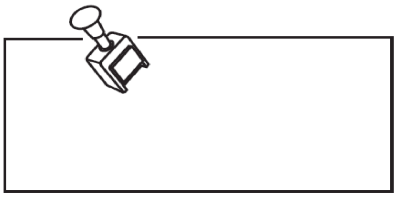

Weight netto: 7.79 (kg)