IA-00N24-003 Door with frame N-24 anthracite set

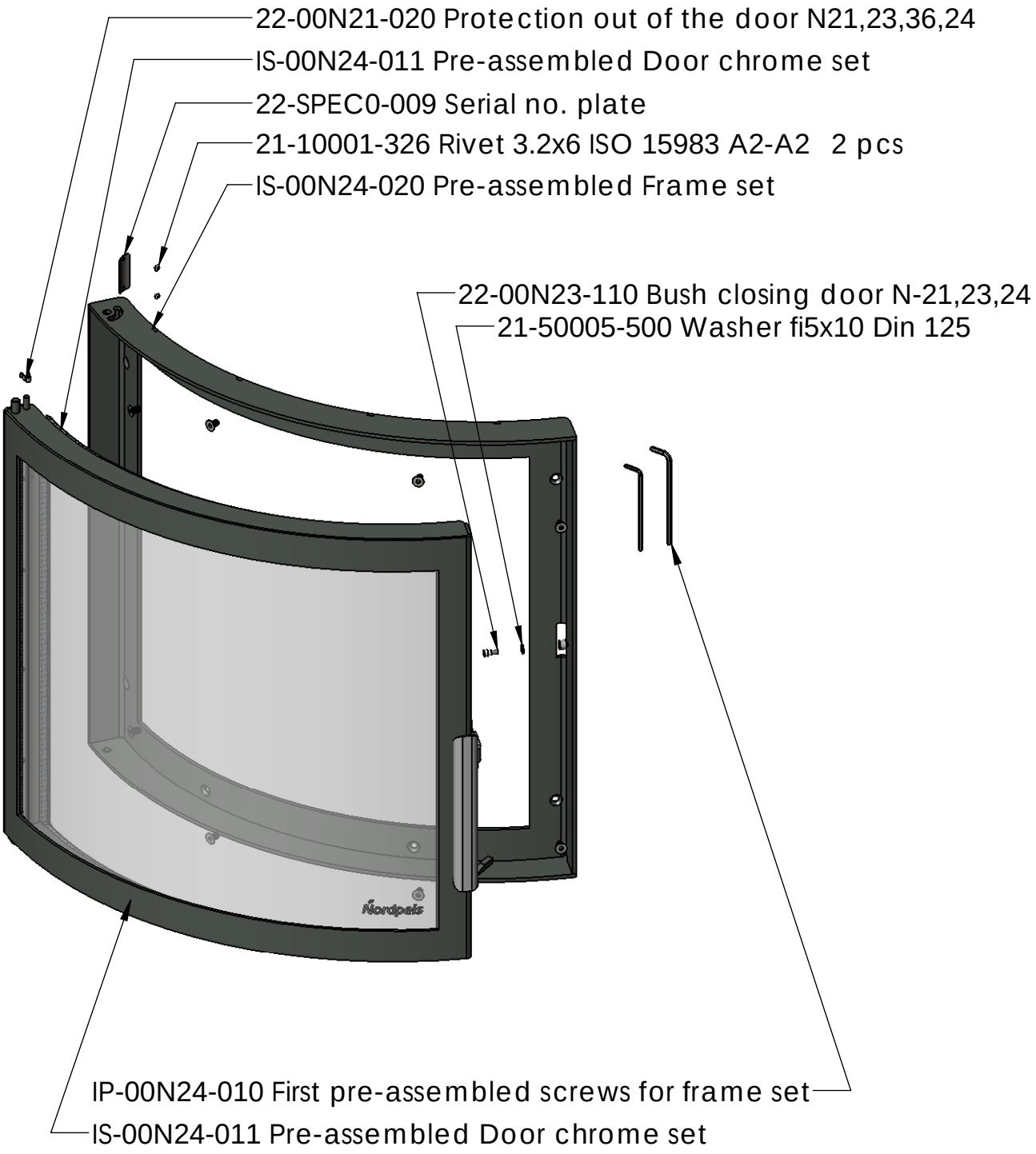

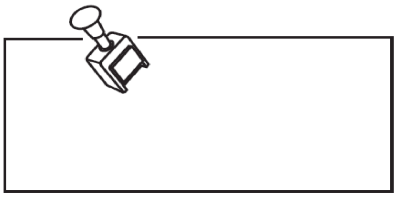

Weight netto: 12.45 (kg)