IA-00N24-000 Door with frame N-24 chrome set

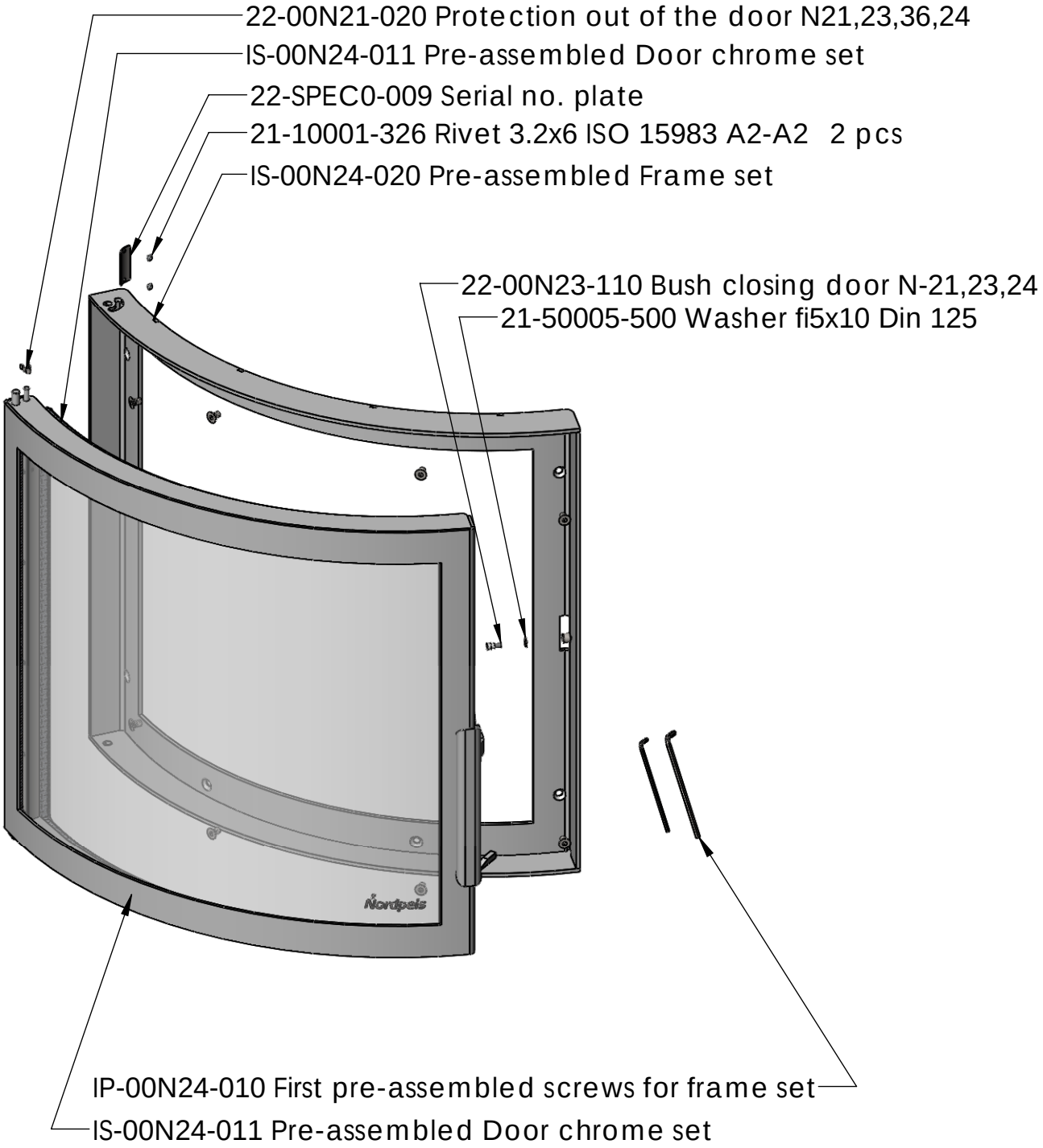

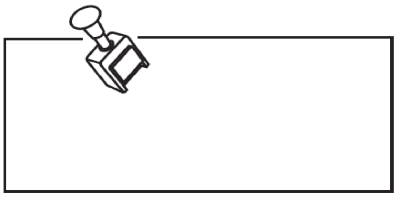

Weight netto: 12.45 (kg)