IA-00N23-007 Front door with door handle N-23G chrome matt set

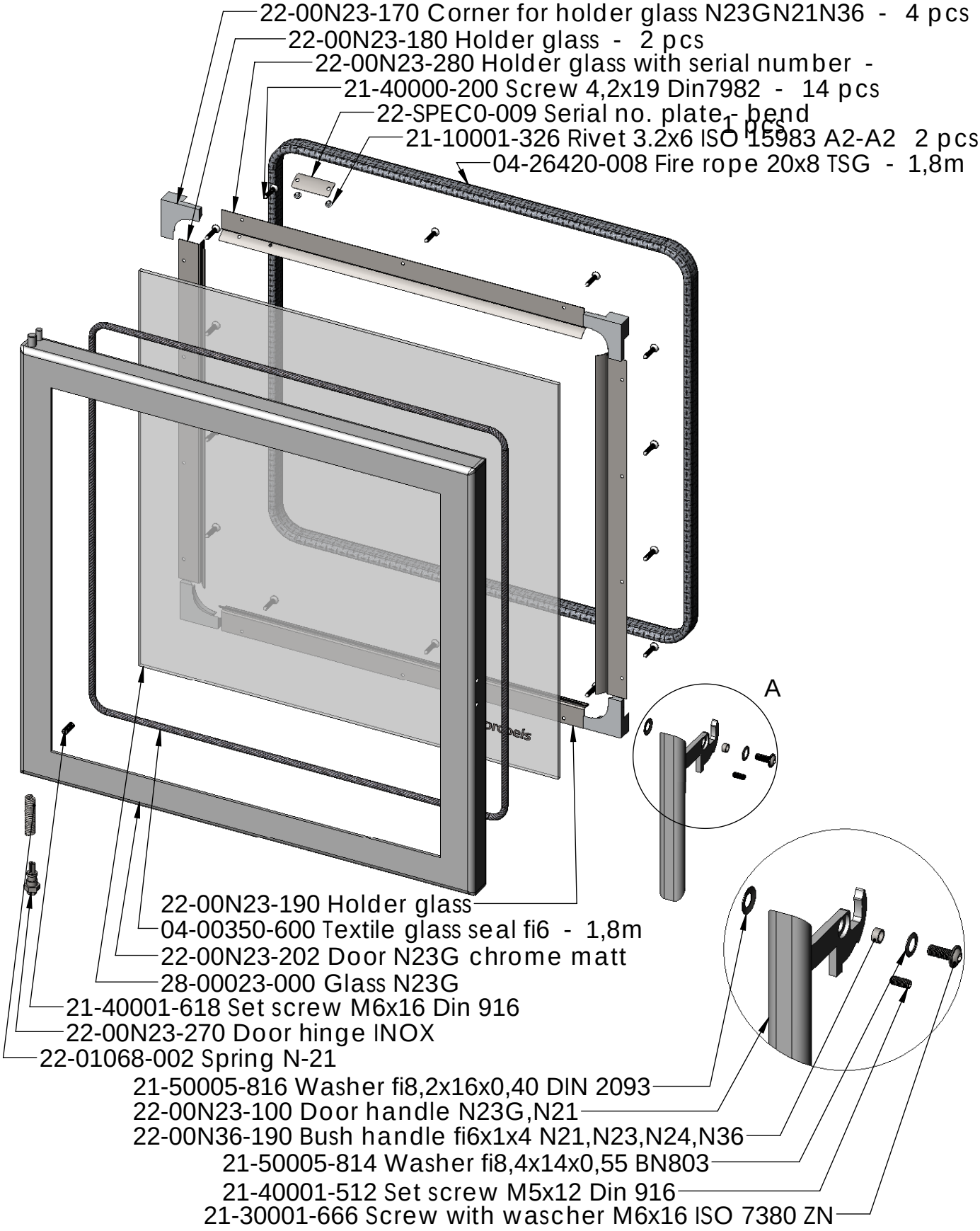

Weight netto: 6.34 (kg)