IA-00N23-006 Front door with door handle N-23G chrome set

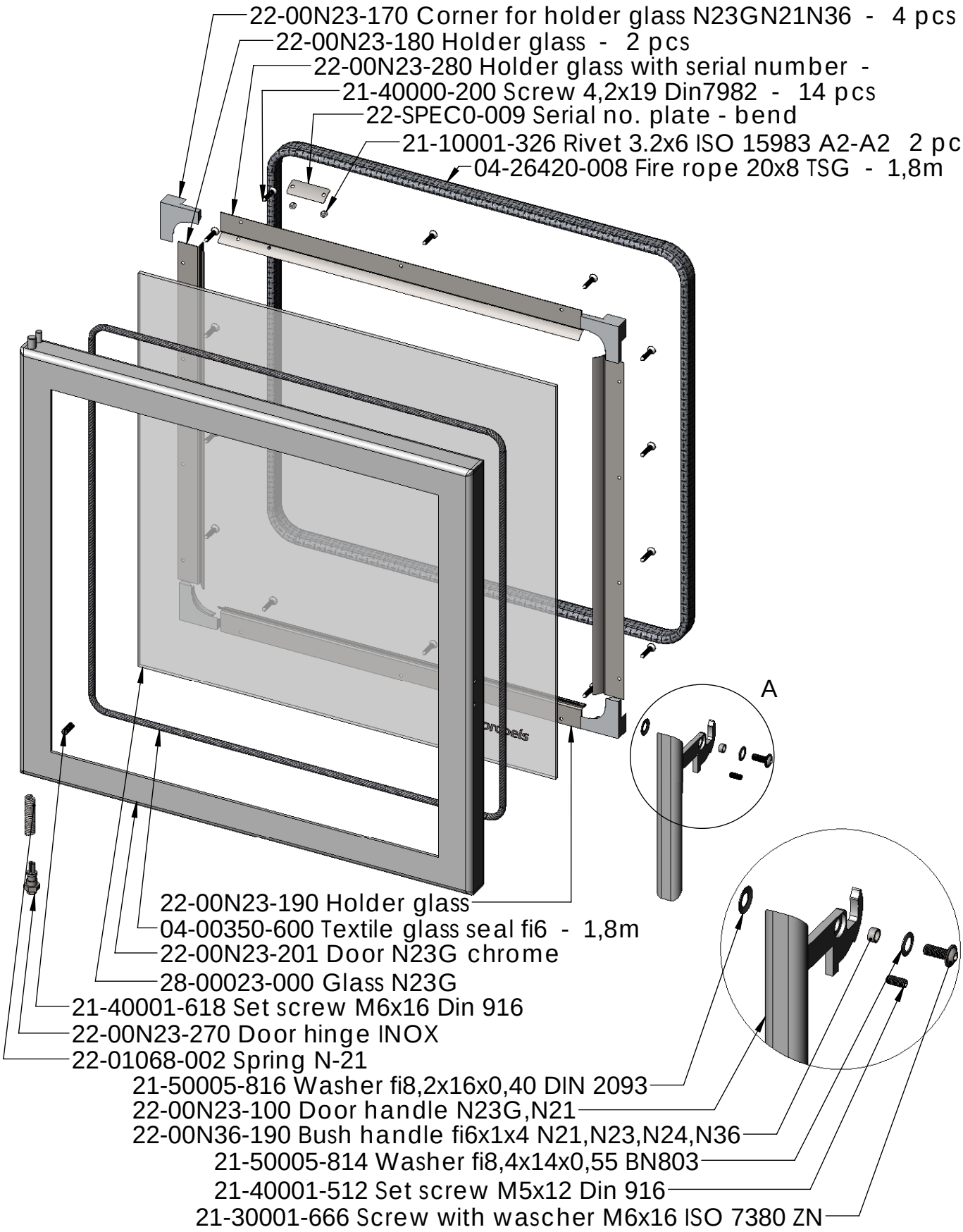

Weight netto: 6.34 (kg)