Nordpeis
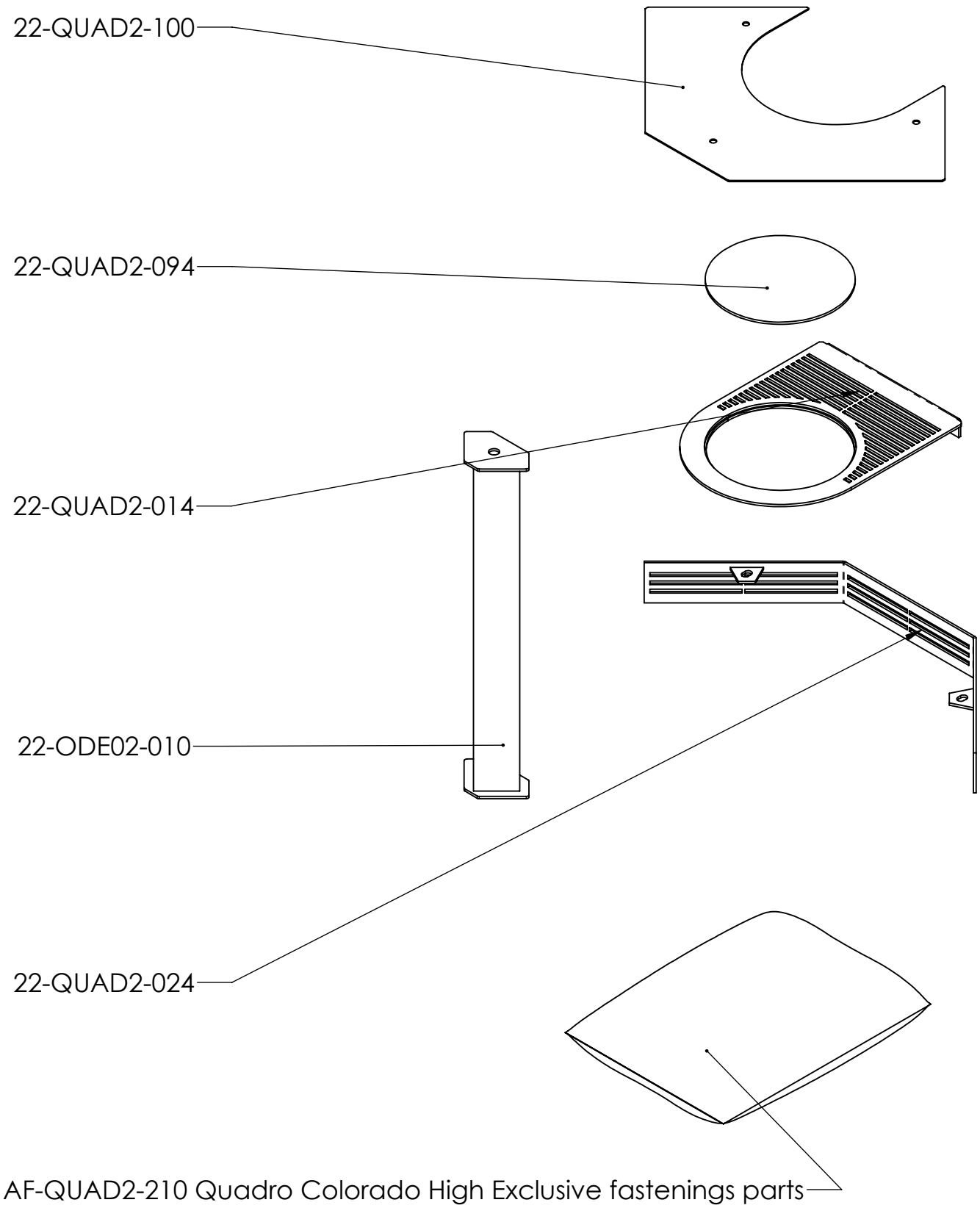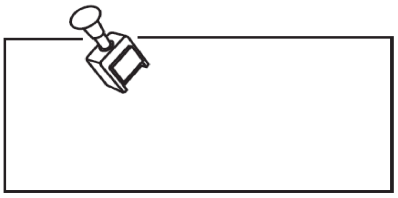
AF-QUAD2-200 Quadro Colorado High exclusive set