Nordpeis

AF-MON01-30L Monaco C left bench - metal set

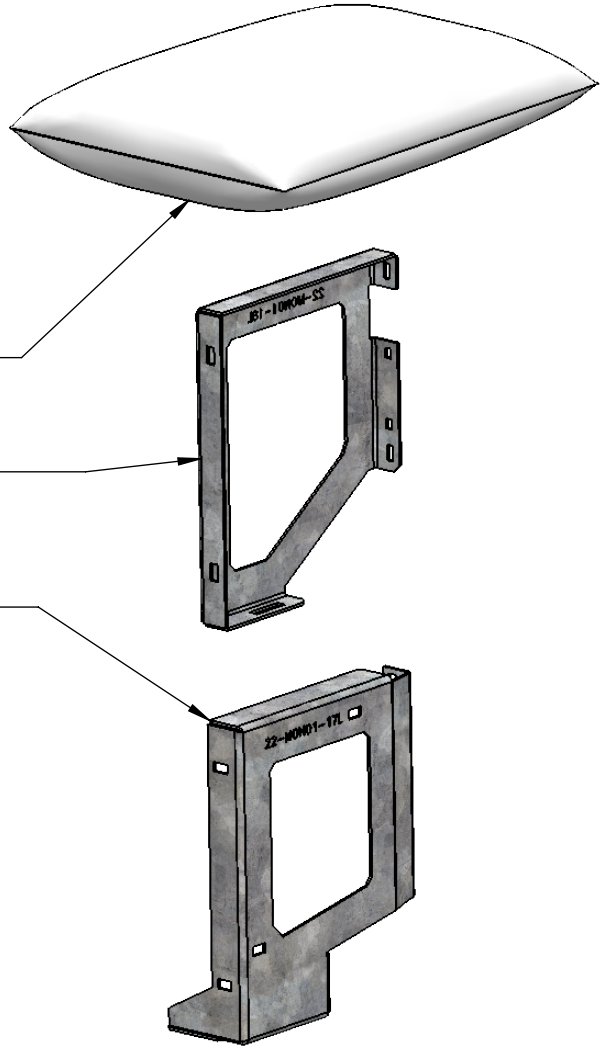

AF-MON01-310 Monaco bench - fast. parts

22-MON01-18L Bracket for bench (low L) 3X

22-MON01-17L Bracket for bench side (low L)

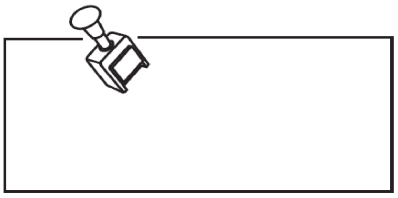

Weight net: 6,28 (kg)

VERSION: **Q1**