Table of delivery

Nordpeis

FP-MON00-600 Monaco woodshelf high

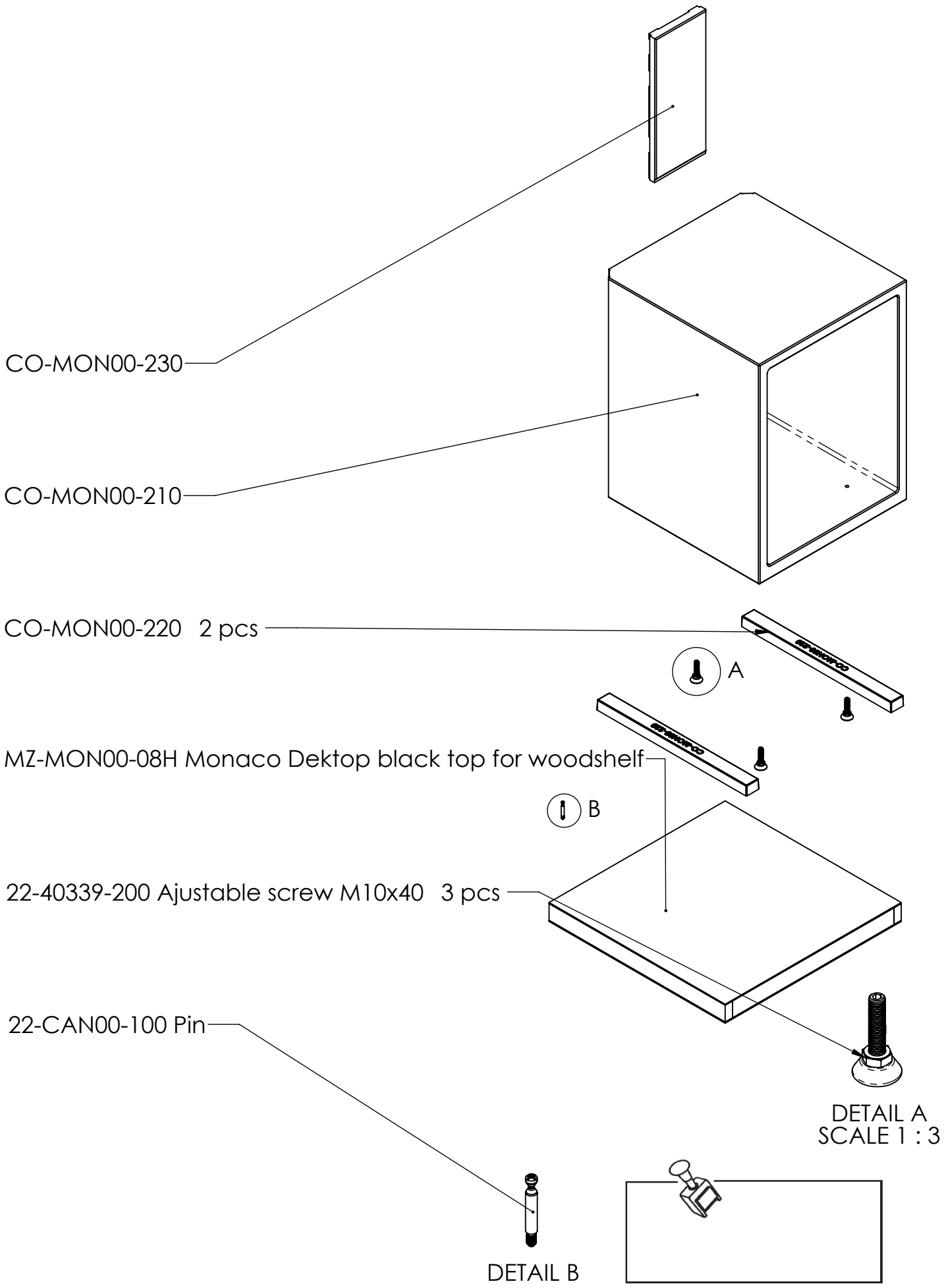

VERSION: **Q2**