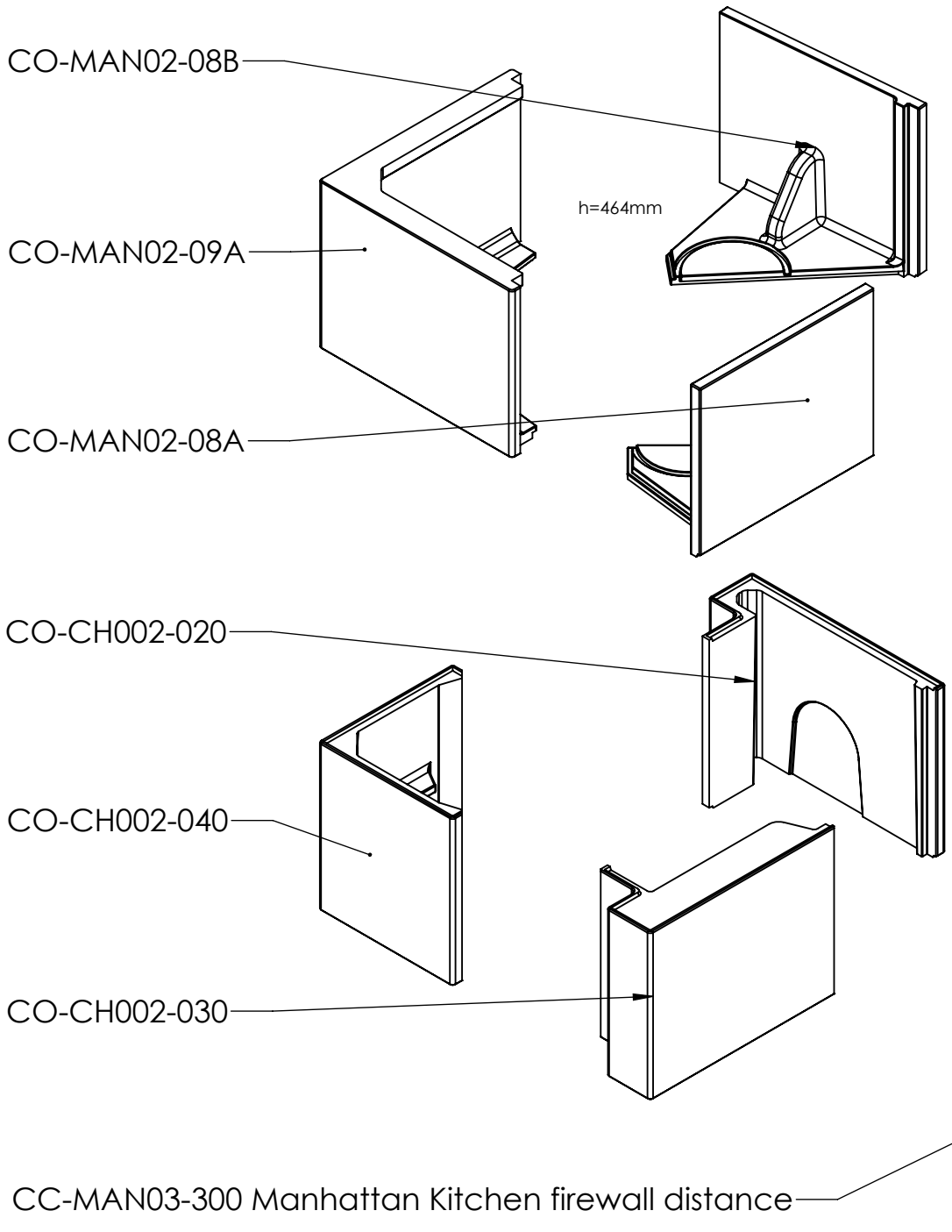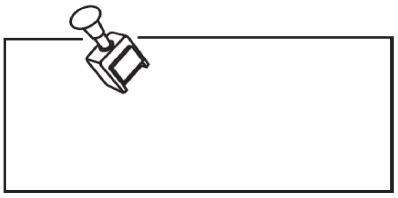FP-MAN03-301 Manhattan II Kitchen EU 2_2