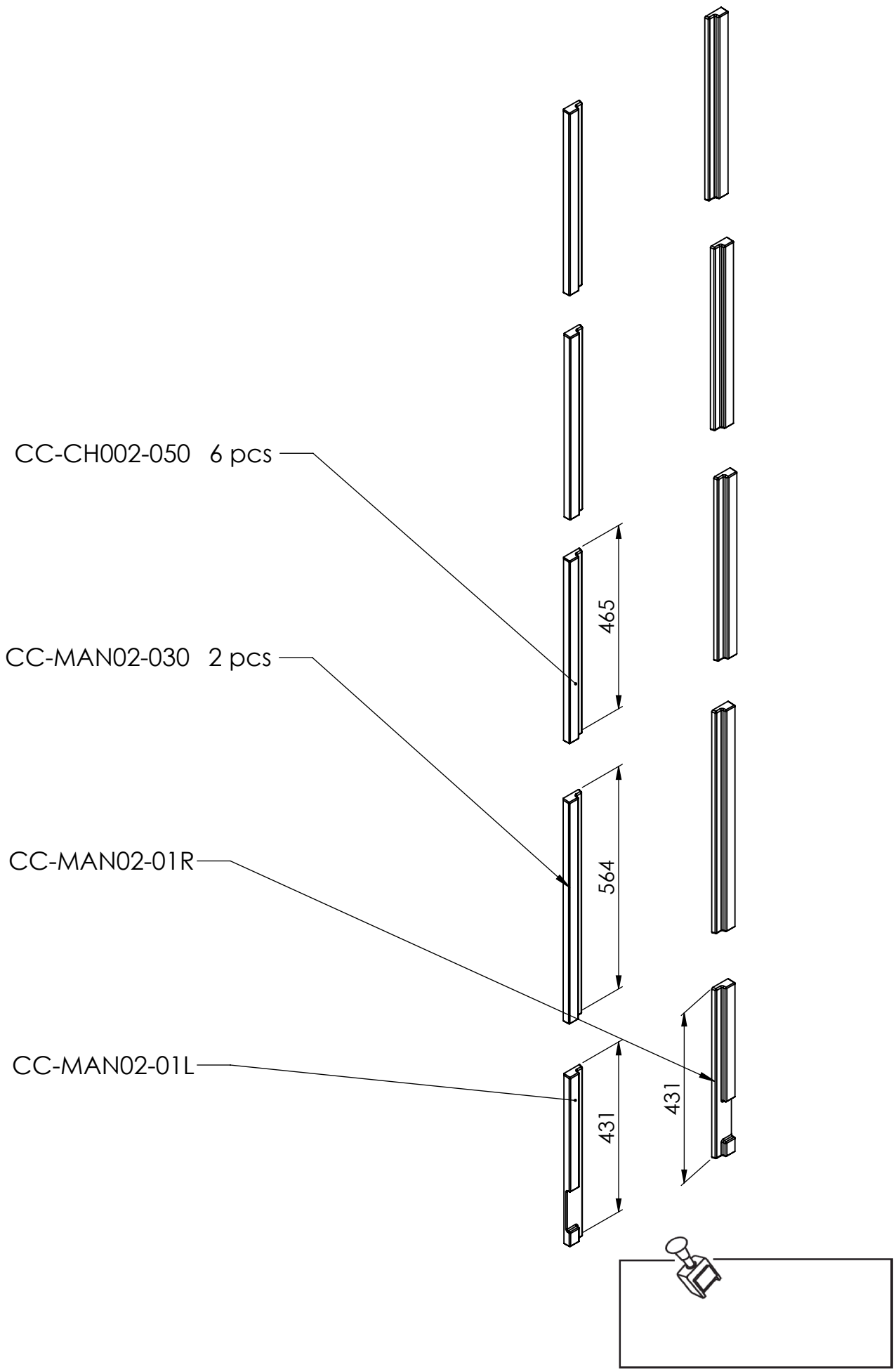CC-MAN03-200 Manhattan High firewall distance