Nordpeis
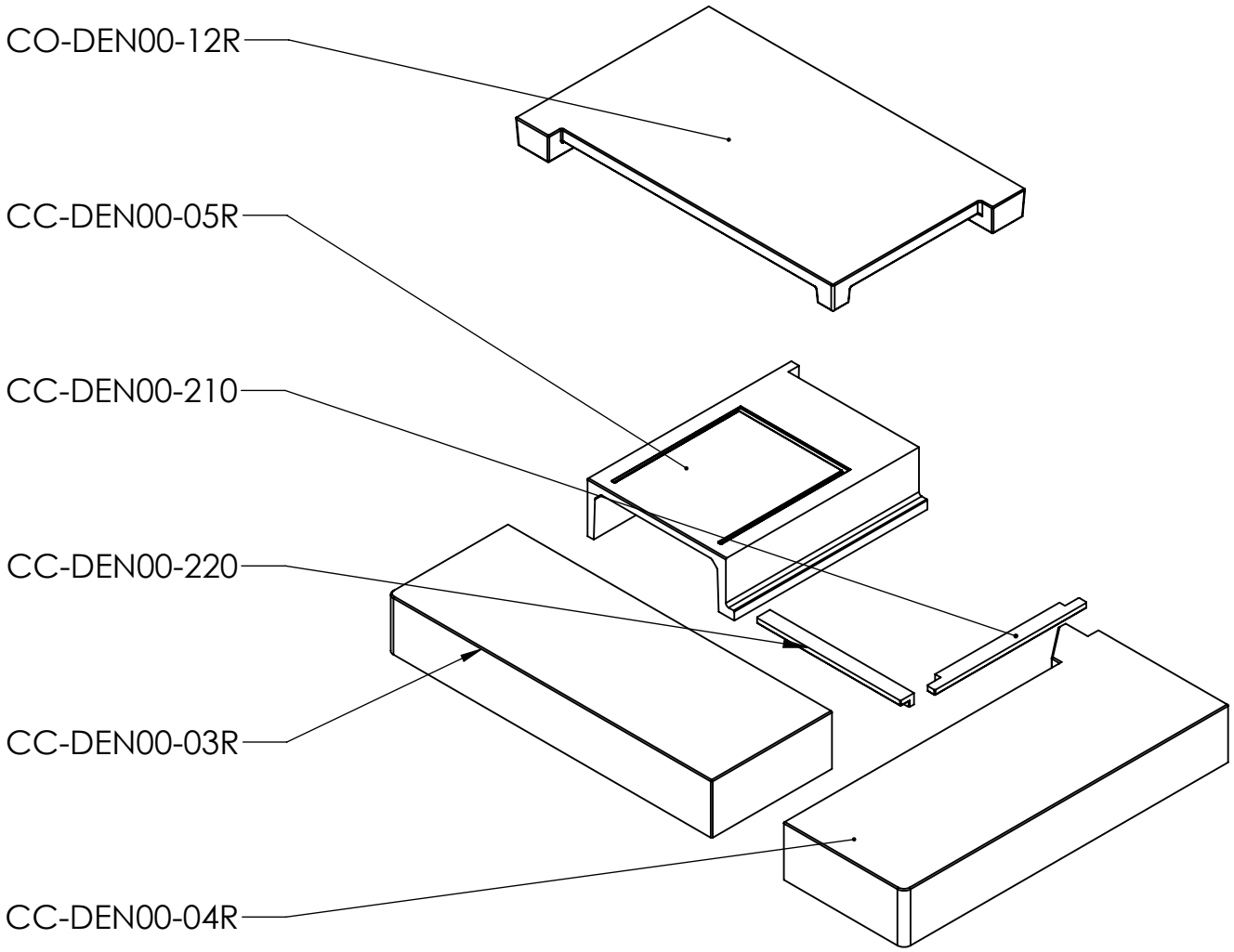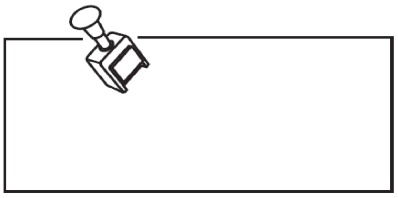
## CC-DEN00-R00 Denver bench set right