Nordpeis

FP-DAV0P-200 Davos P Low

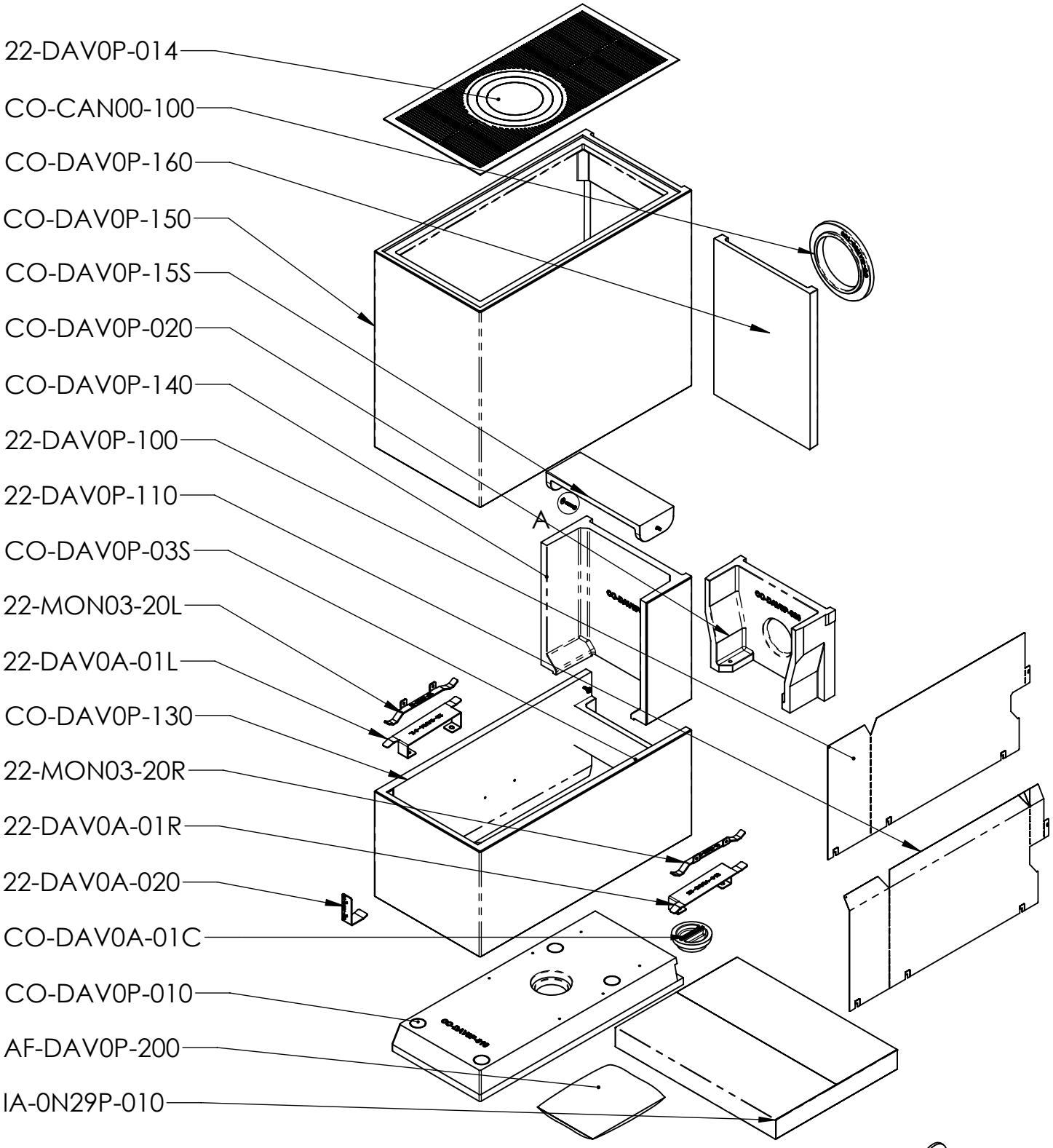

21-50001-018 Washer fi6x18 Din 9021 4 pcs

21-30004-035 Screw M6x35 Din 933 4 pcs

DETAIL A

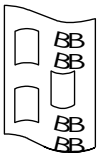

Instruction
24-DAV0P-200

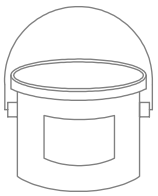

AF-00035-001

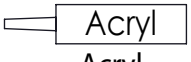

Acryl
23-00080-000

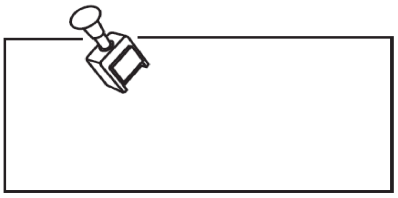

VERSION: Q1