Northstar

Basel
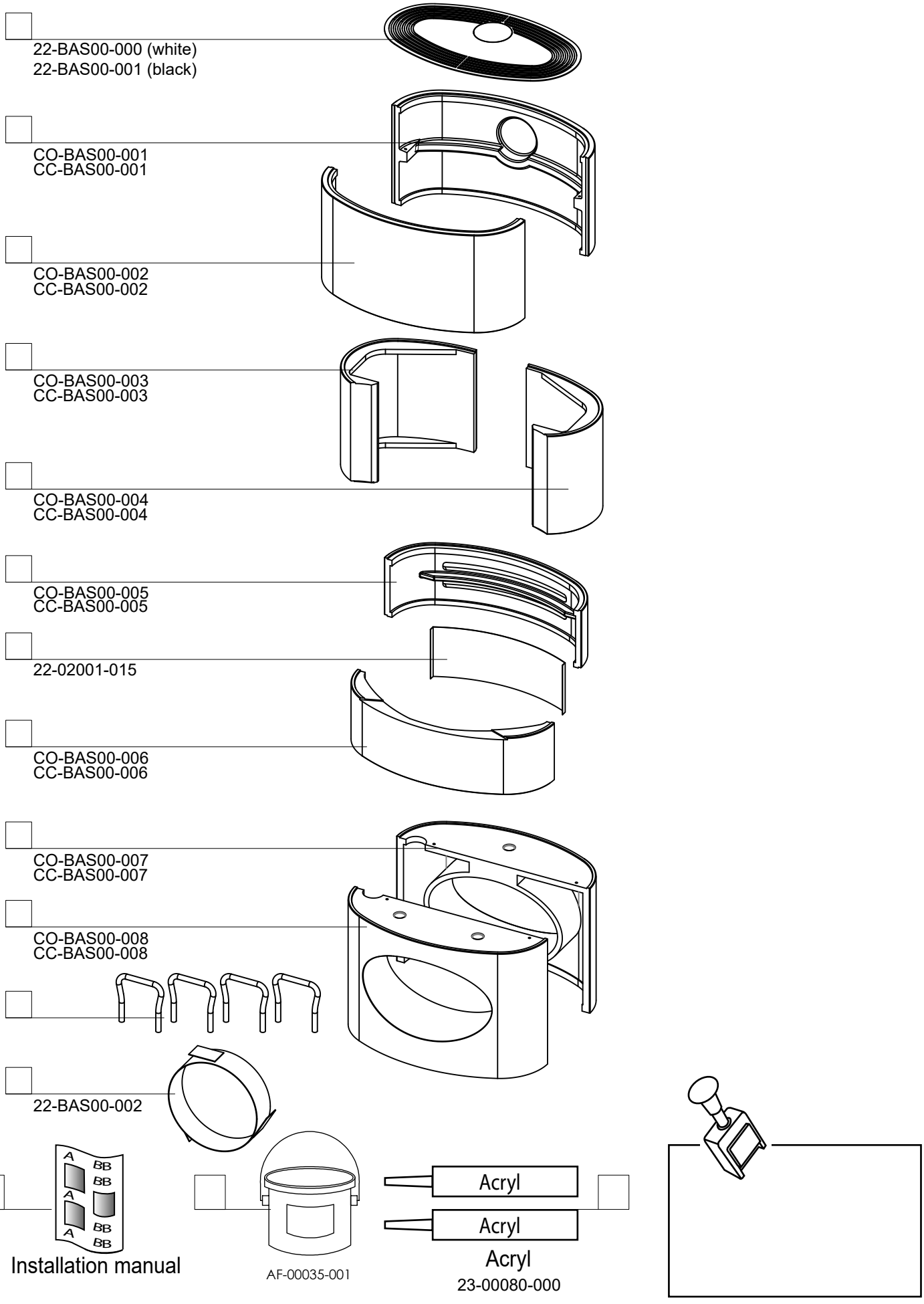
FP-BAS00-100 (concrete)
CC-BAS00-100 (concrete)