Nordpeis

FP-CAN01-BIO Cannes II Bio

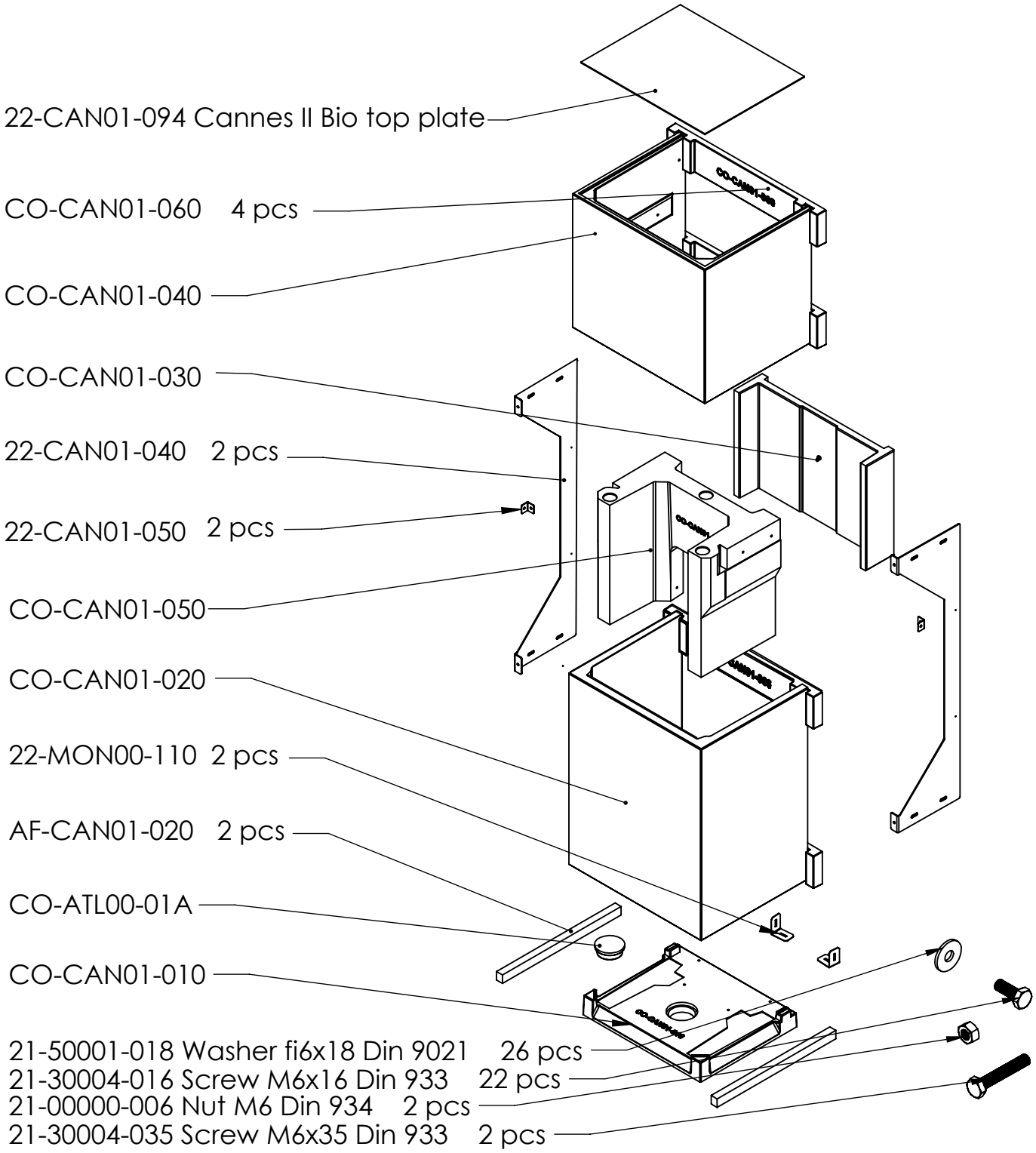

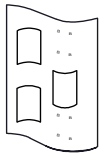

Instruction
24-CAN01-BIO

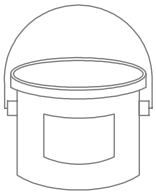

AF-00035-001

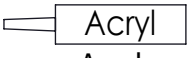

Acryl
23-00080-000

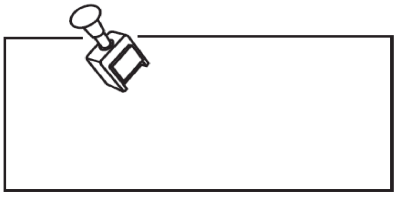

VERSION: Q0