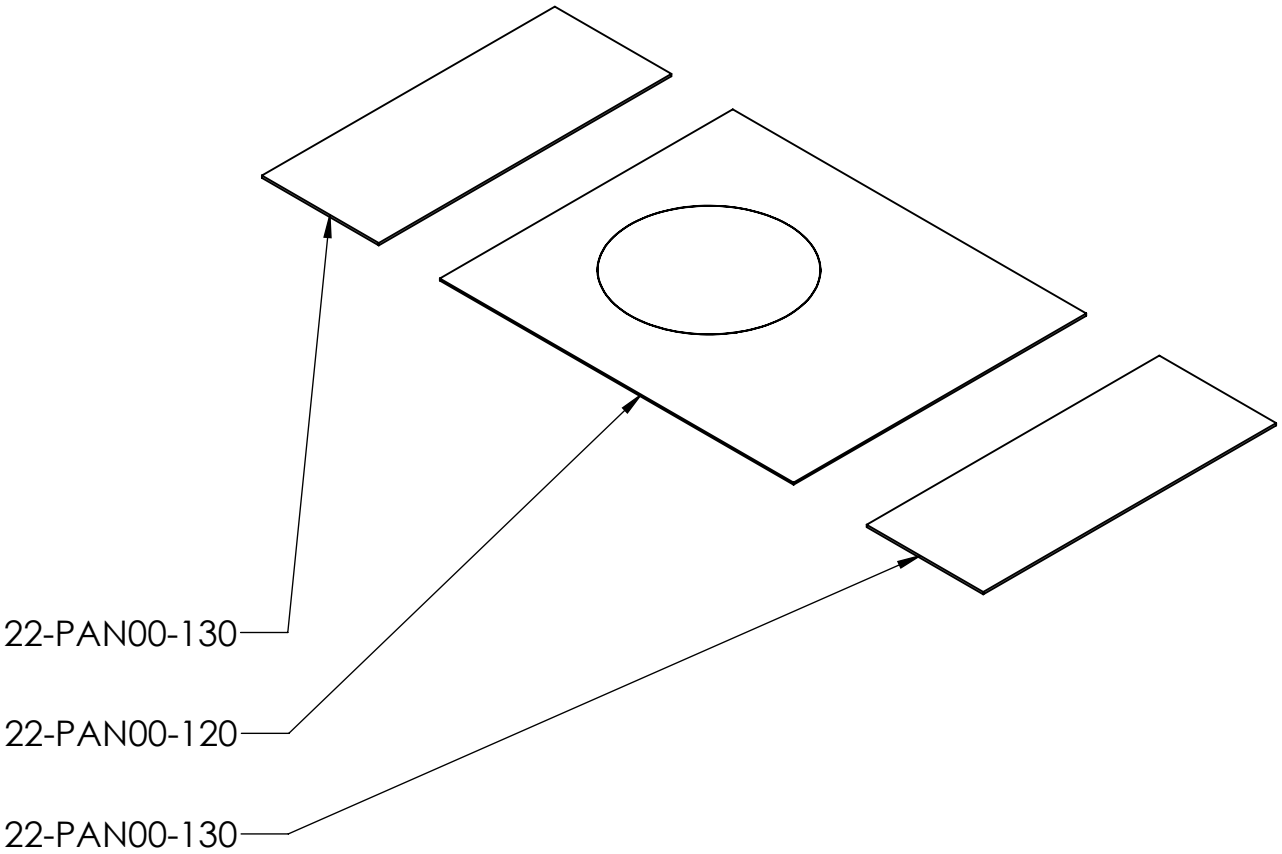AF-PAN00-30C Panama medium Q-34FL accesrioes set