Nordpeis
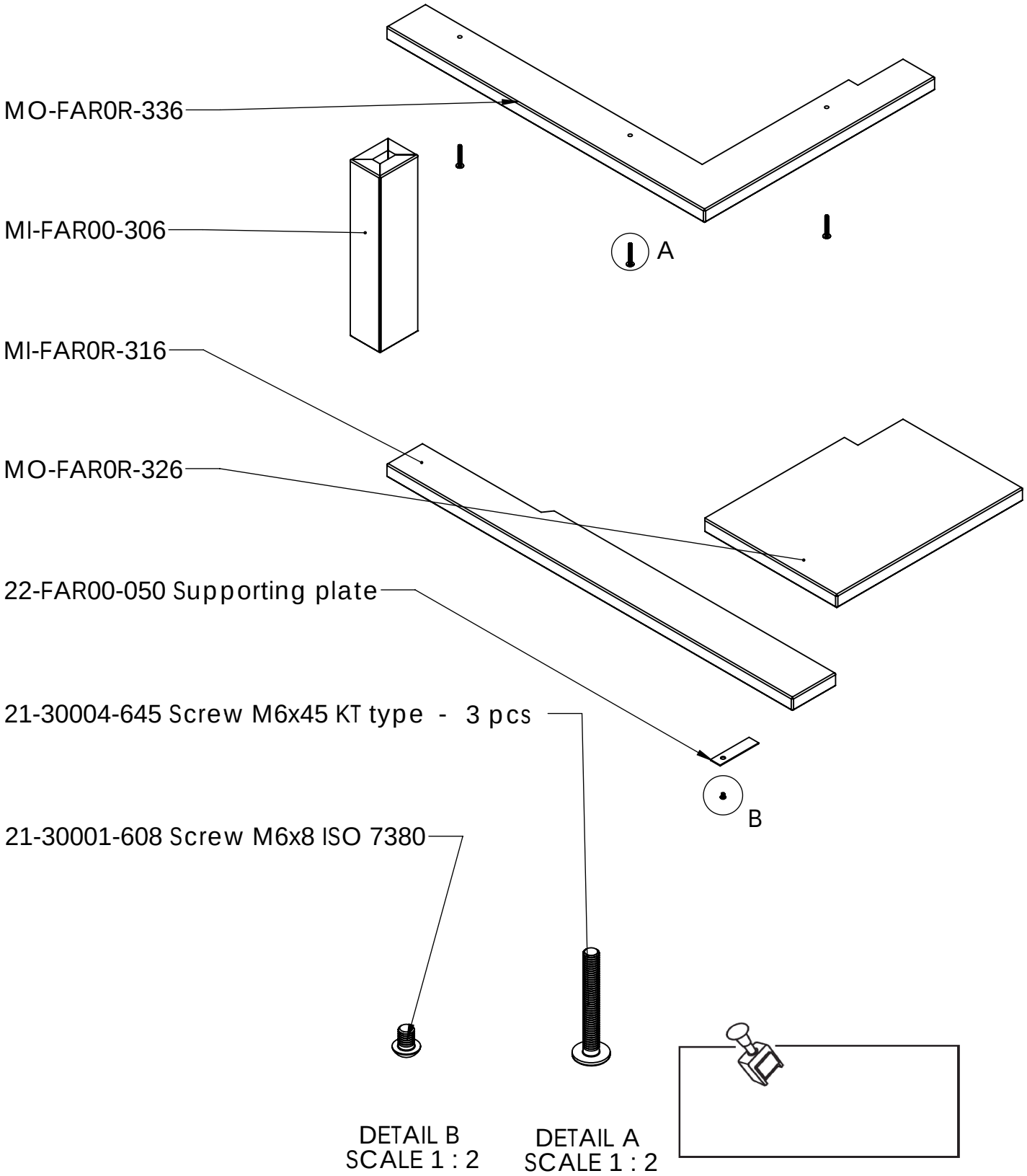
MZ-FAR0R-106 Fargo marble bench right set gbl