Nordpeis
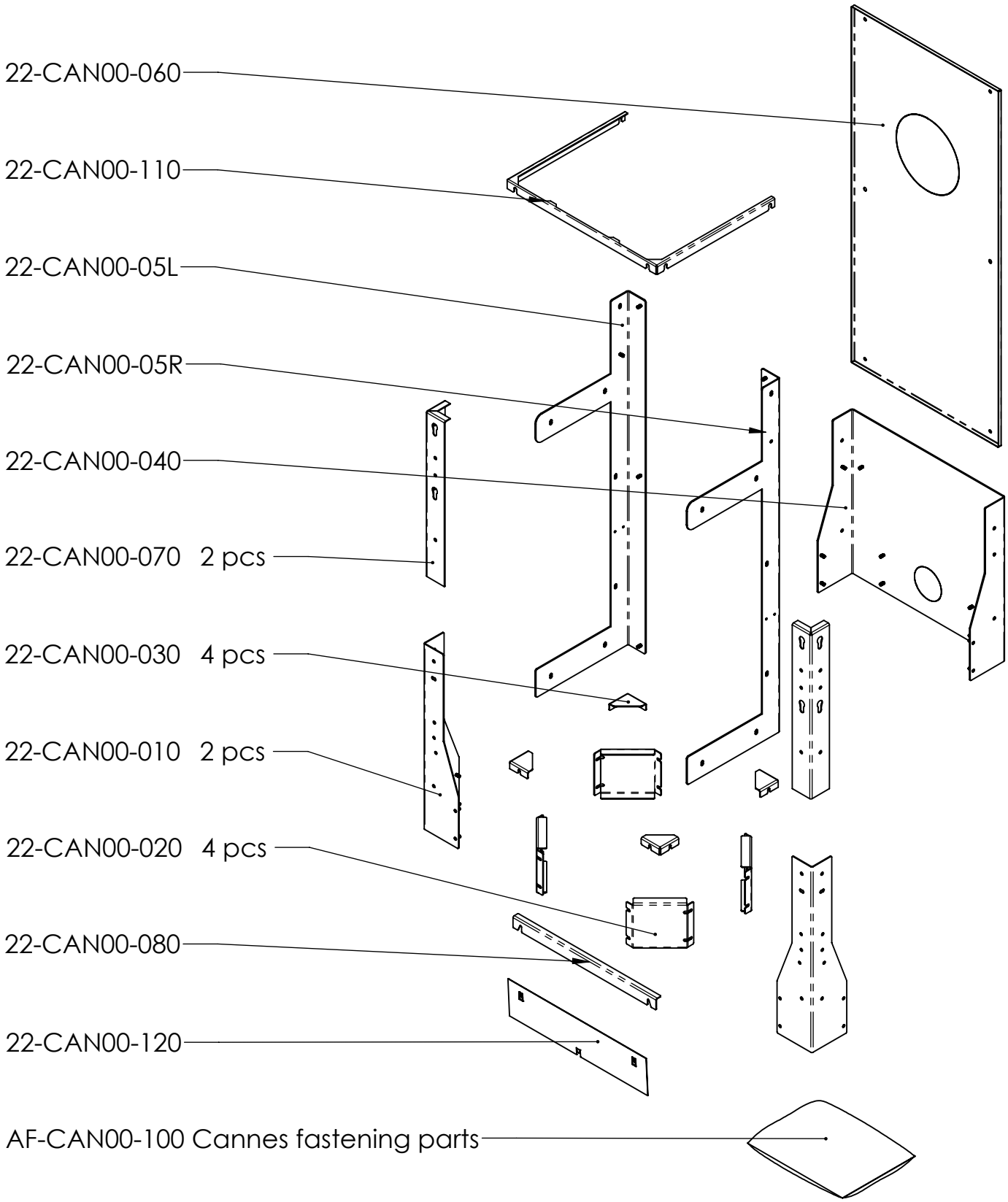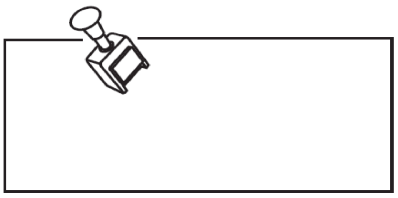
## AF-CAN00-200 Cannes metal parts set