Northstar
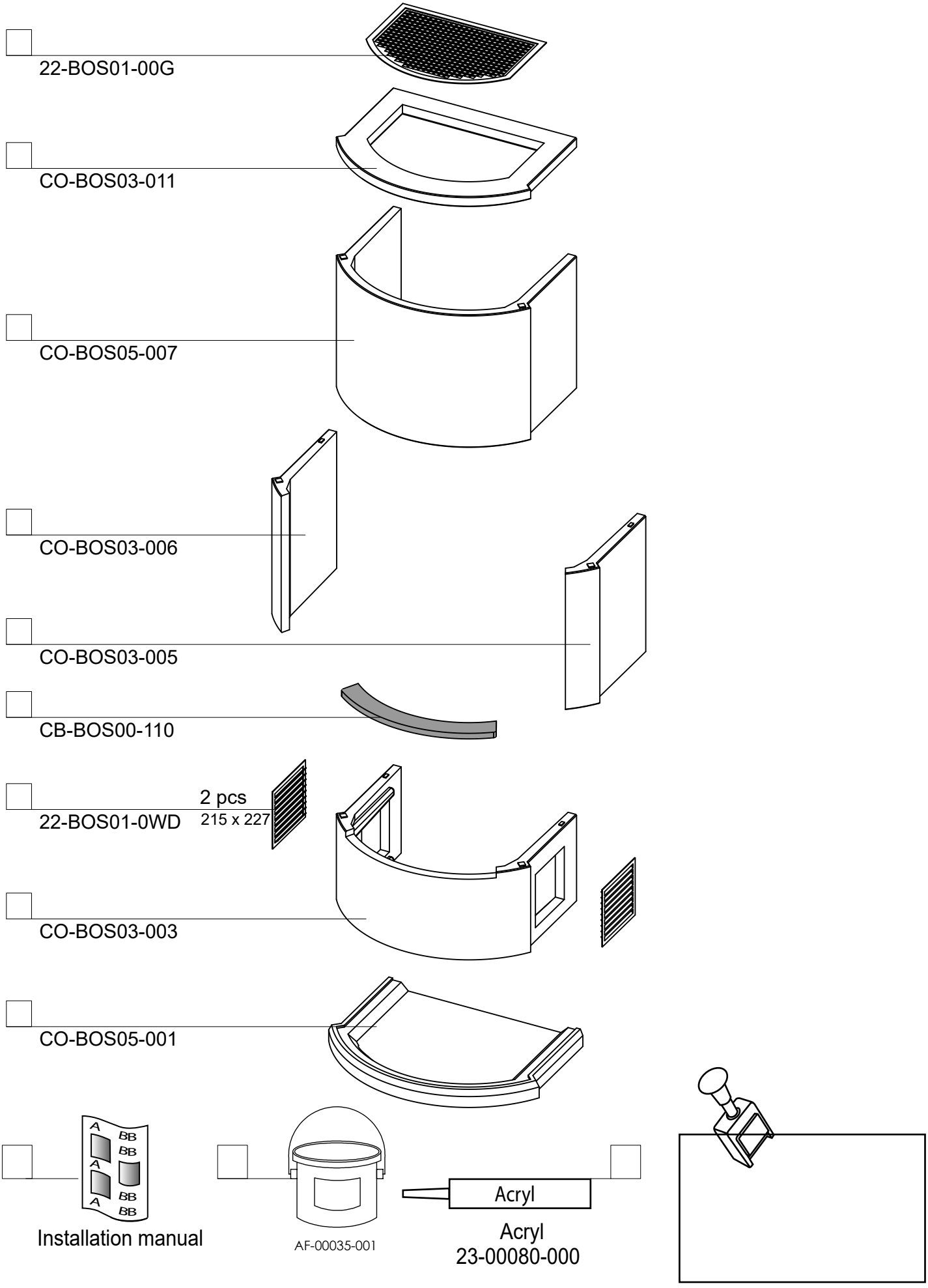
Boston straight low FP-BOS05-110