SA-00008-000 Door Vega set

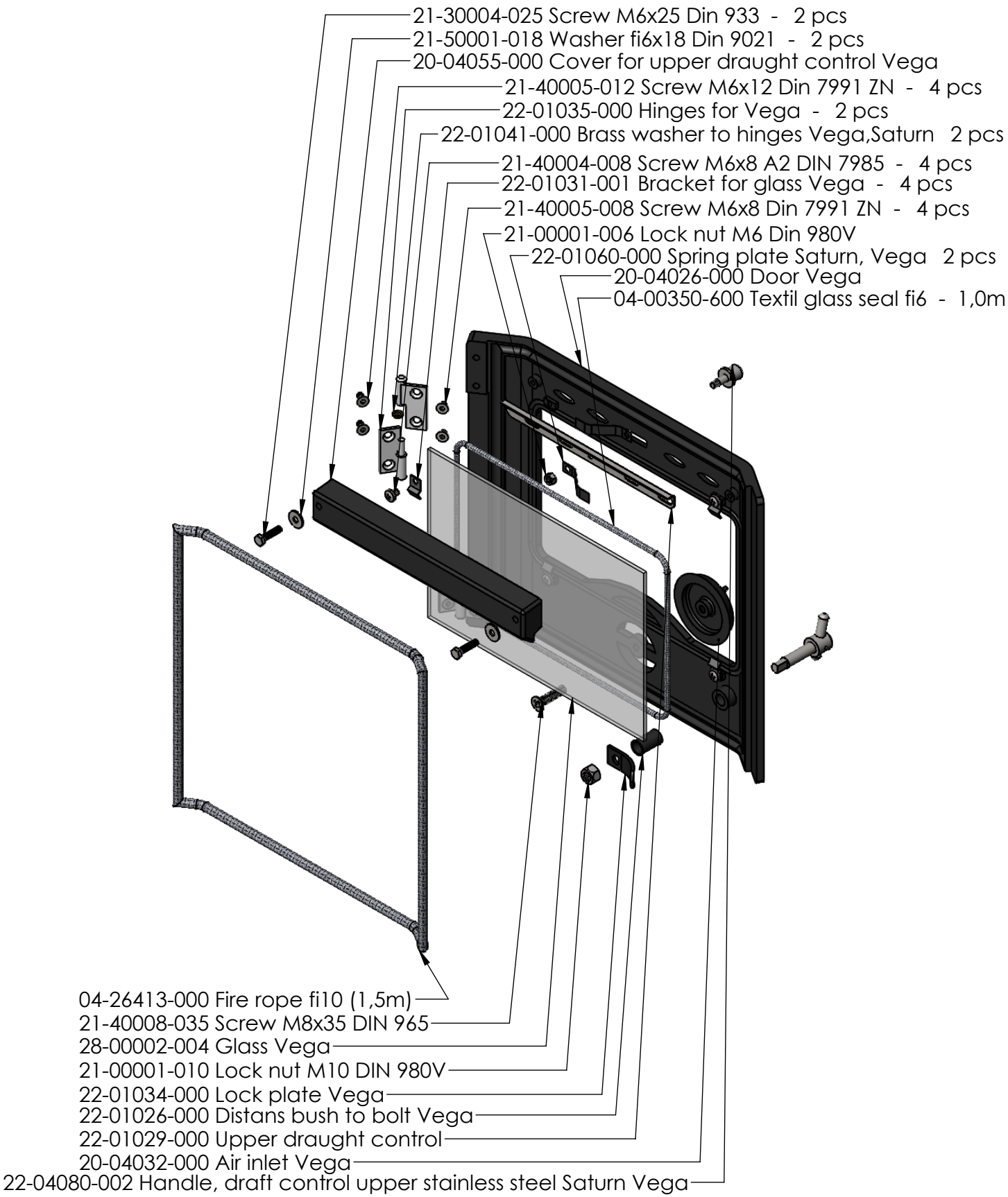

Weight netto: 7.04 (kg)