Nordpeis

SA-00010-090 Smarty sideplates for classic in stainless steel

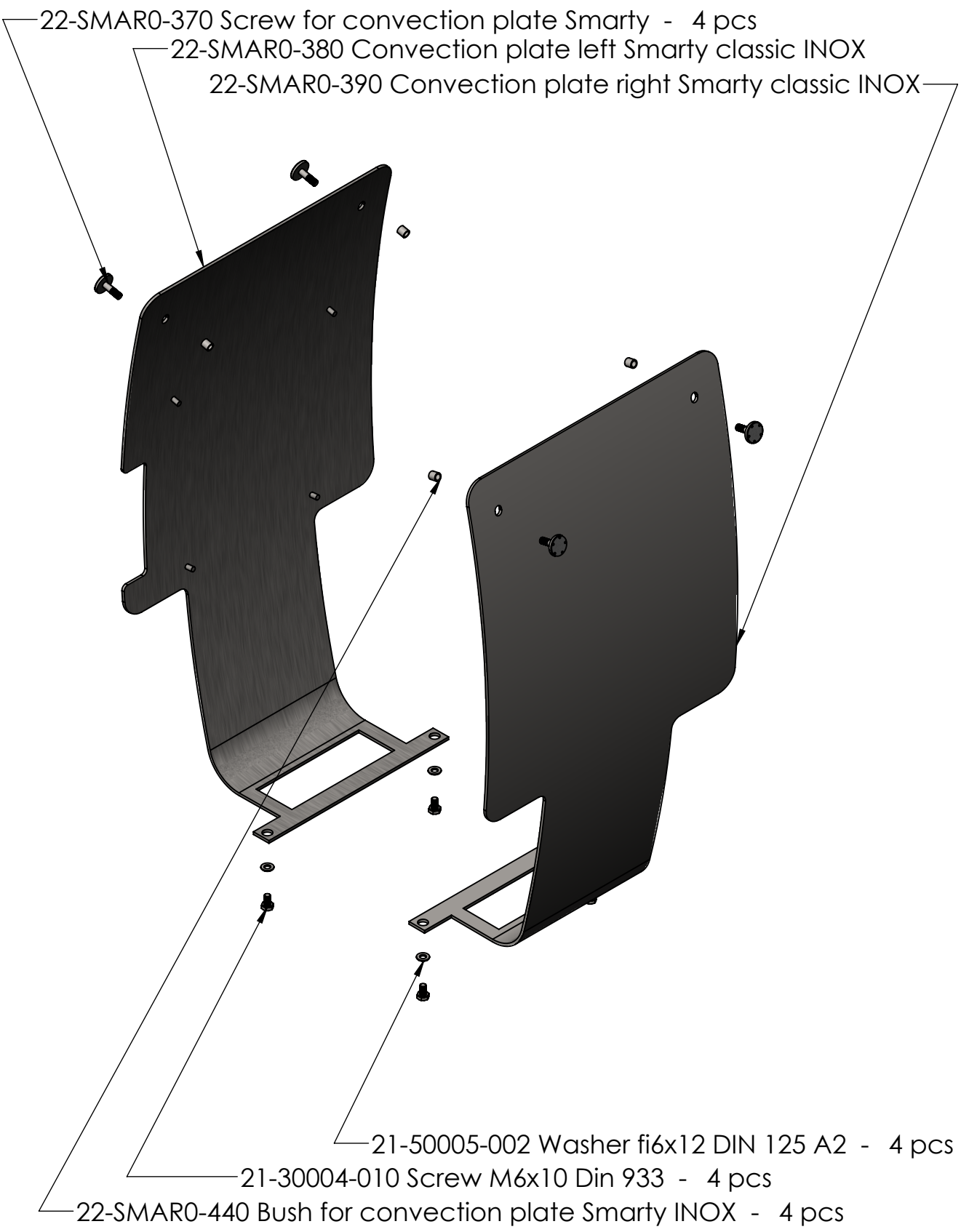

Weight netto: 7.70 (kg)

2012-06-11