SA-QUADR-010 High top str. Quadro incl. Olivin

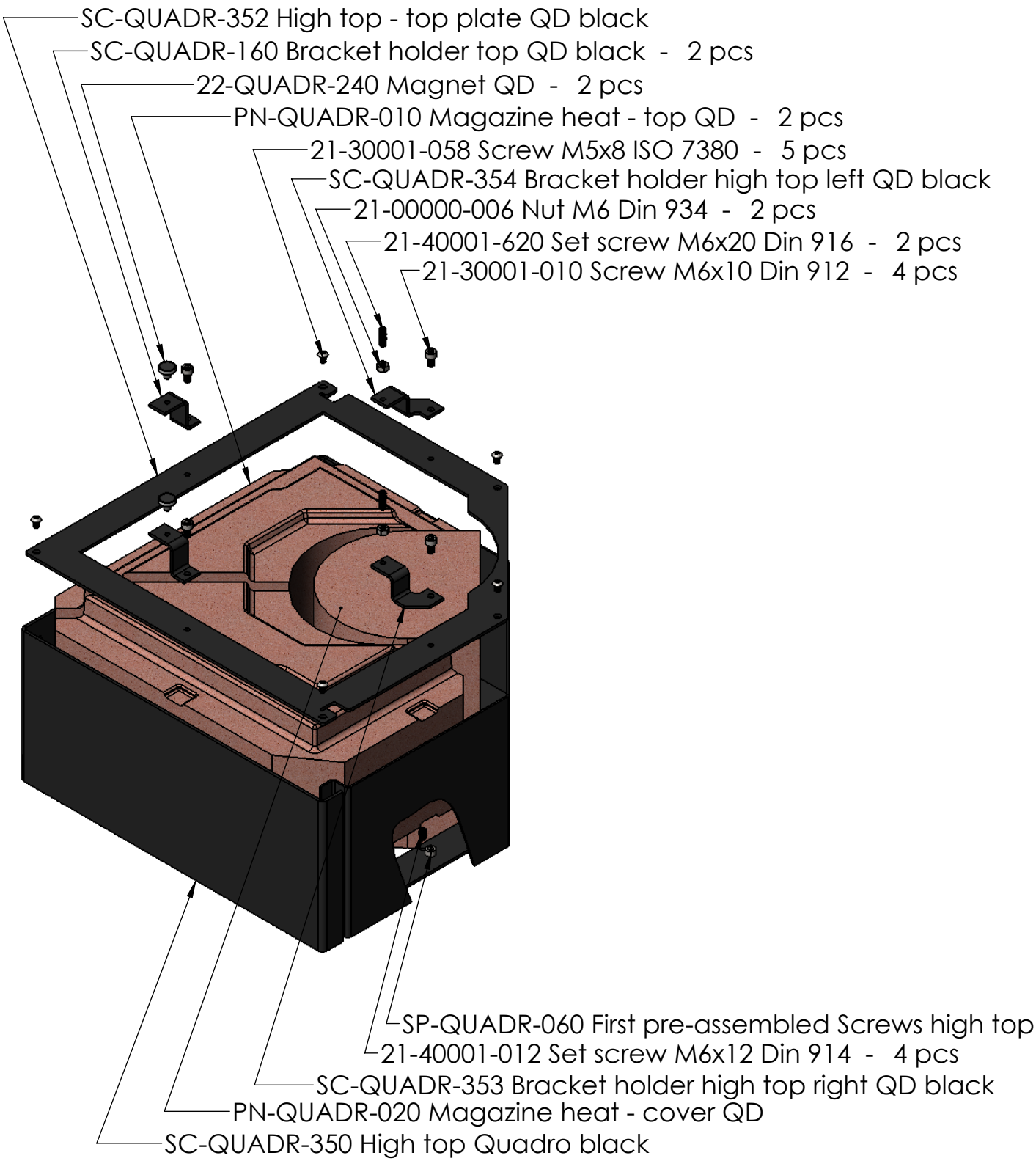

Weight net: 51.83 (kg)

VERSION: **Q0**