IA-0NI26-050 Air regultor S-26R - set

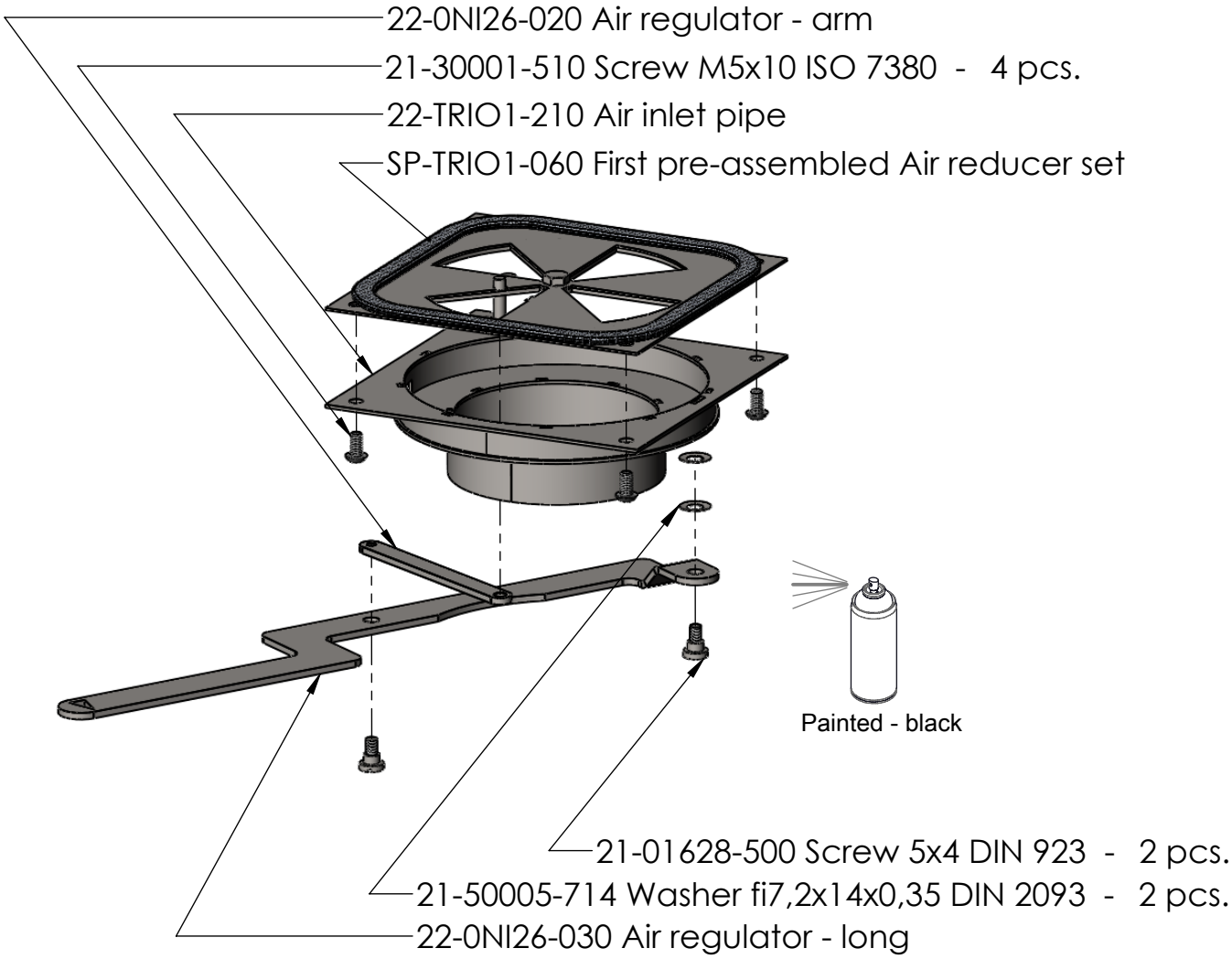

Weight netto: 0.88 (kg)