IA-00N23-084 Back door N-23G black set

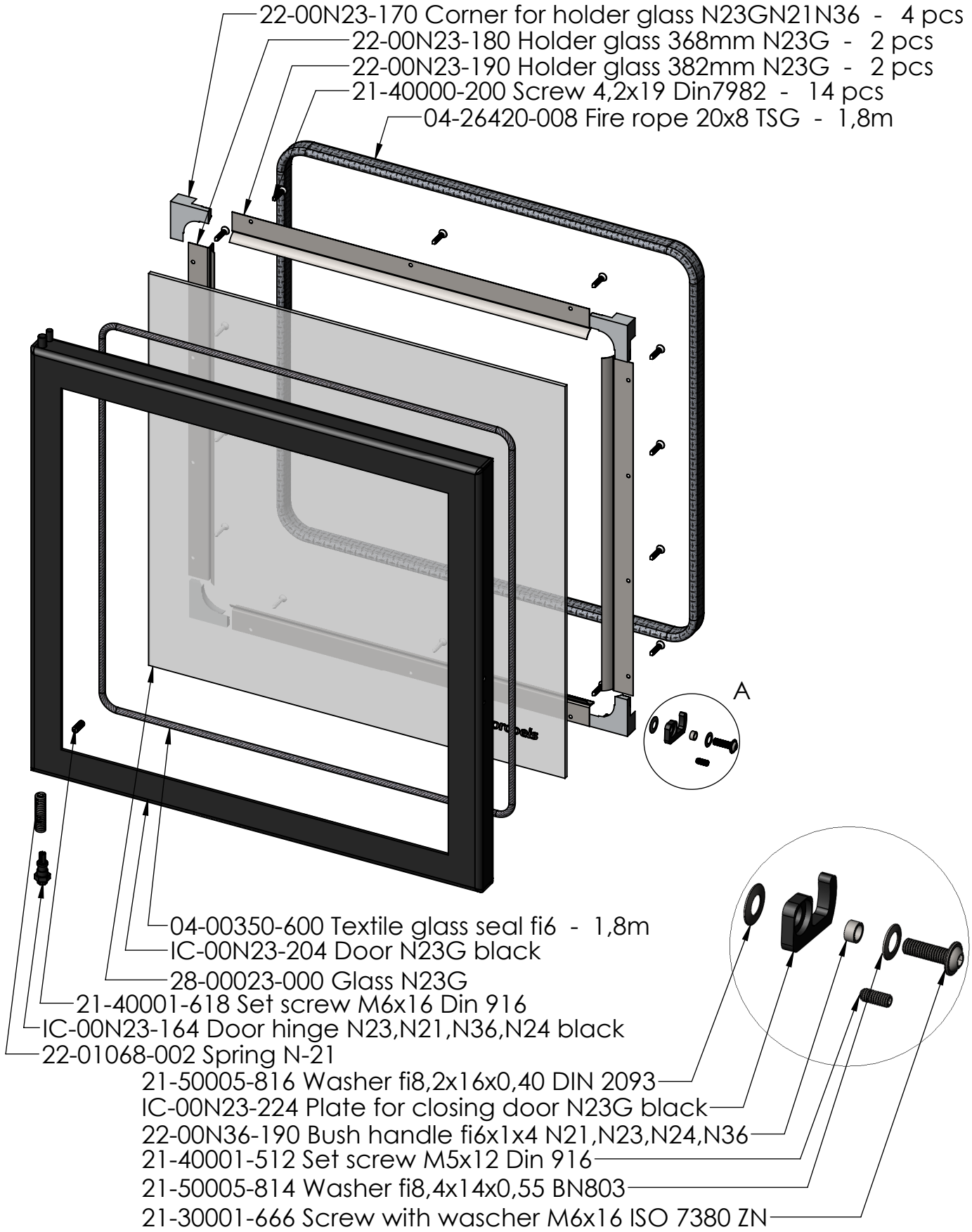

Weight netto: 6.16 (kg)