IA-00N23-012 Frame front with door chrome N-23G set

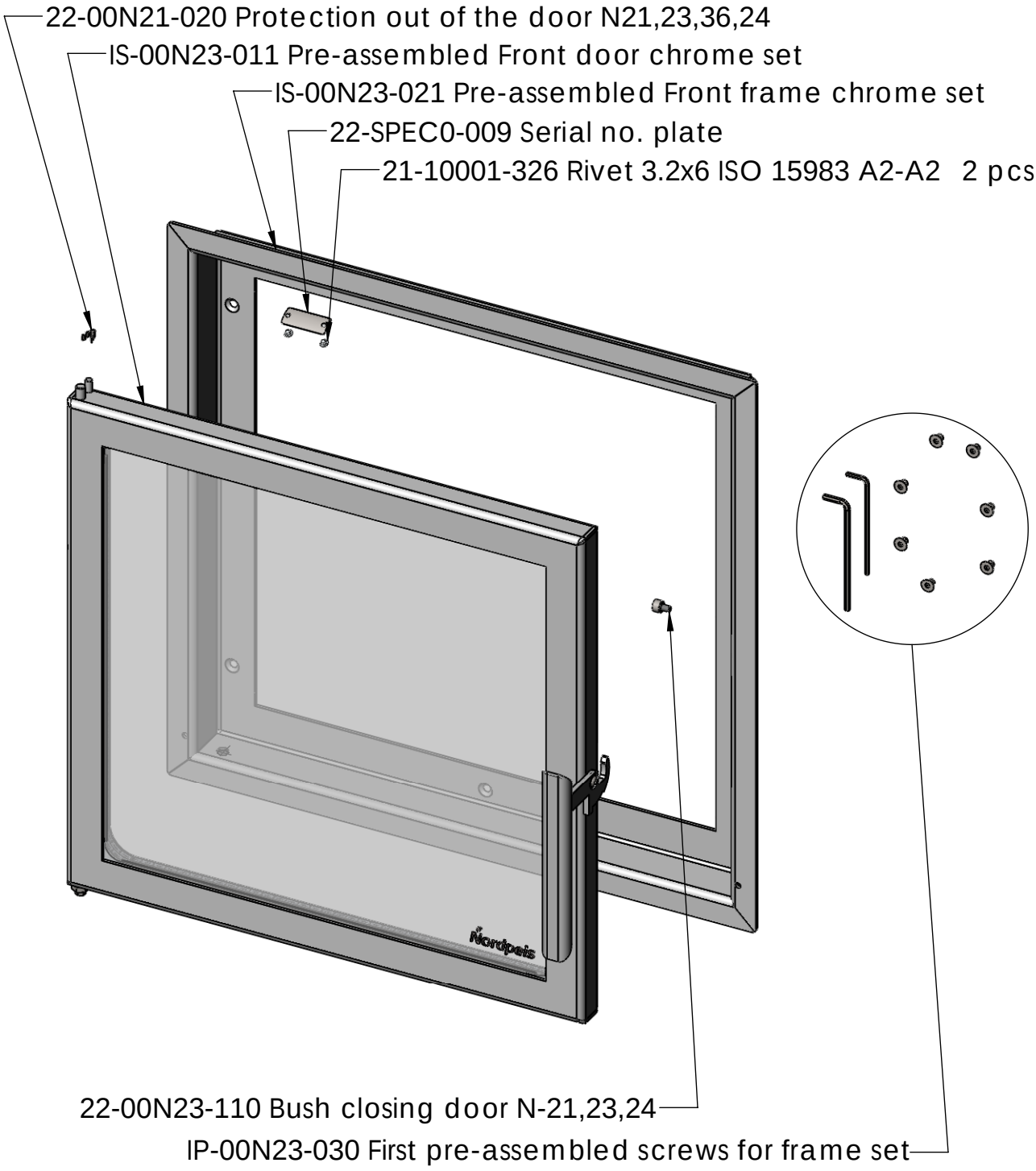

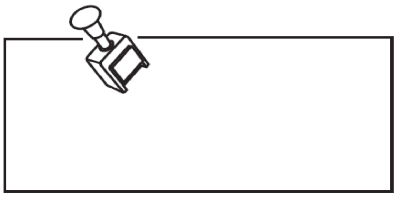

Weight netto: 10.77 (kg)