IA-00N21-012 Door with door handle N-21 chrome matt set

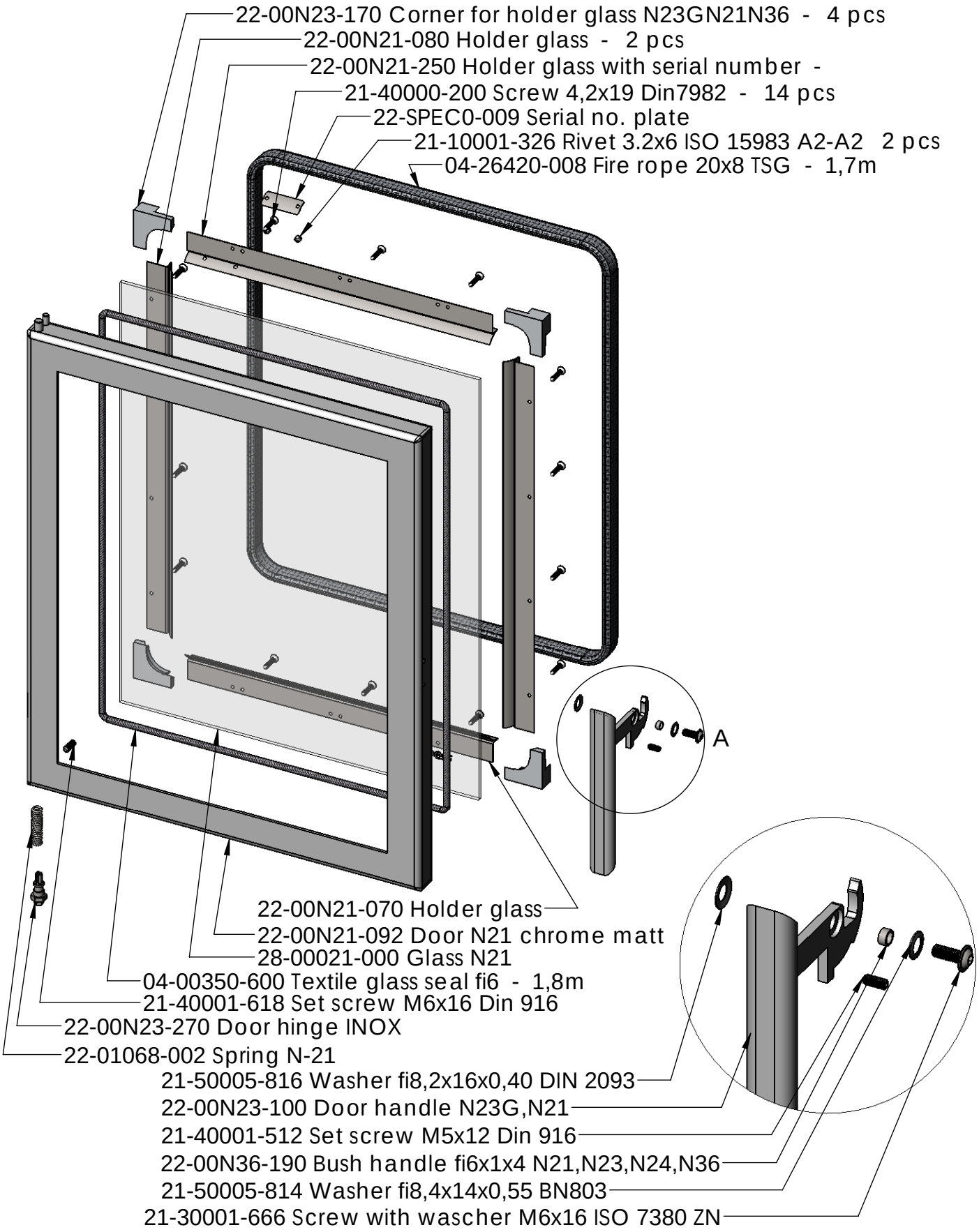

Weight netto: 6.14 (kg)