Table of delivery

Nordpeis

SN-ORIGE-D10 Origo Exclusive Colorado DV

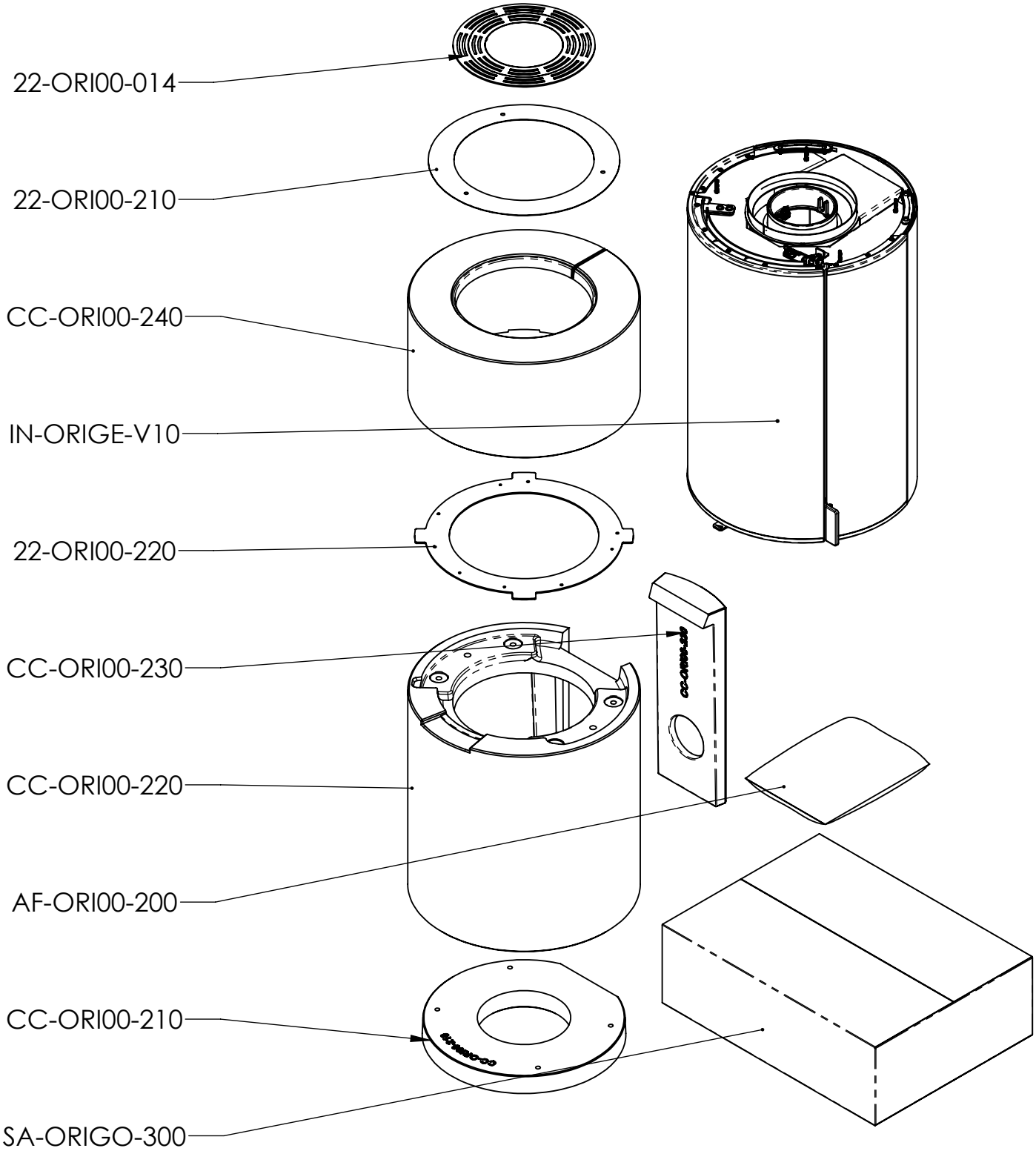

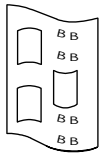

Instruction
24-ORIGE-M50

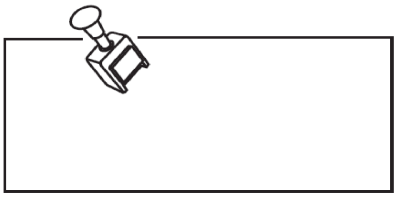

VERSION: **Q0**