# Table of delivery

## FP-WAV0F-100 Wave F 2+2

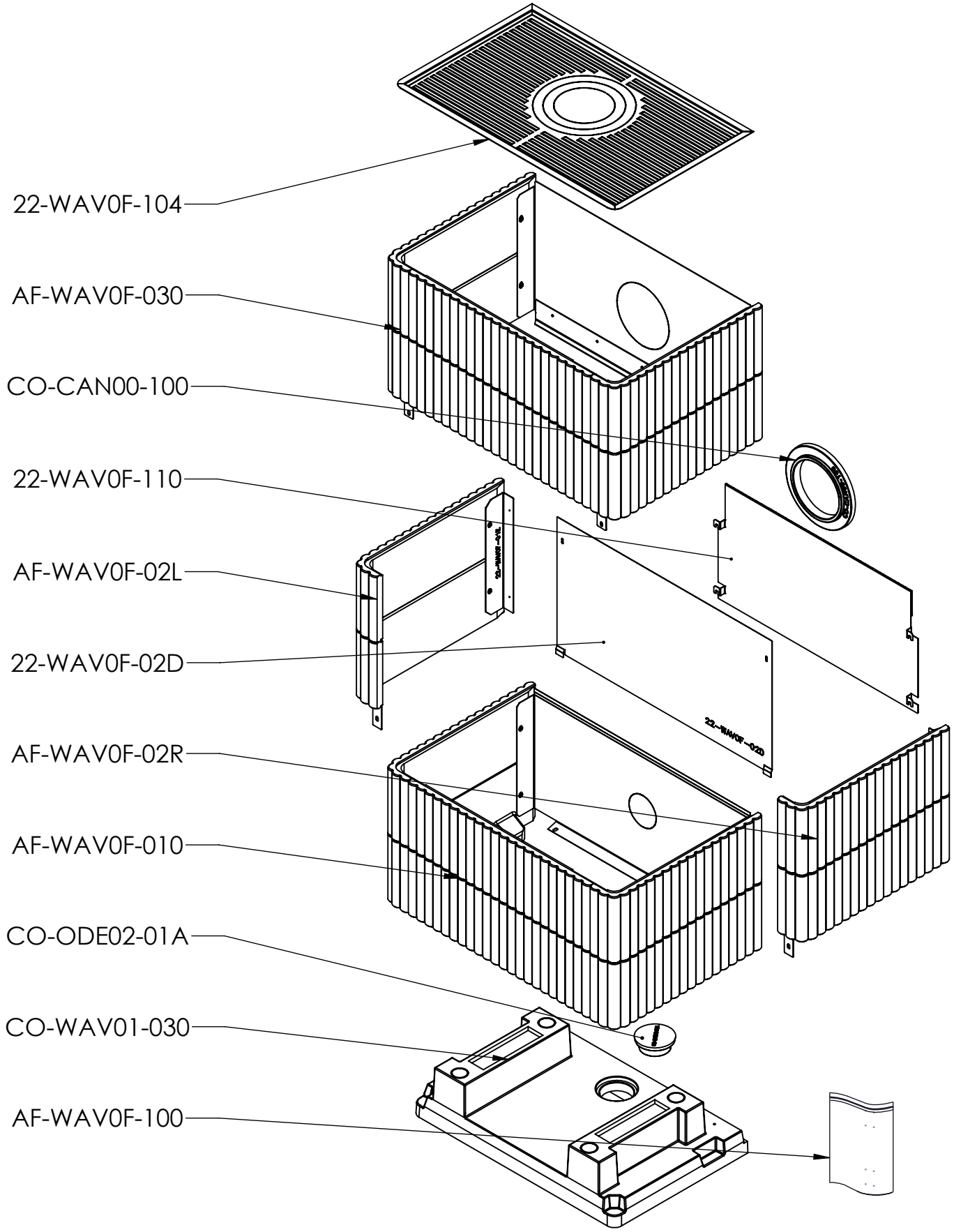


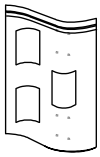

Instruction
24-WAV0F-100

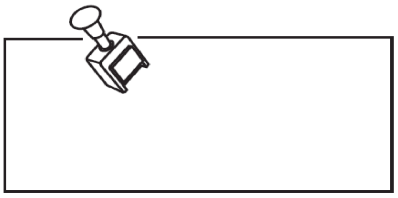

VERSION: **Q0**