Nordpeis

AF-YOU03-010 You Concrete base

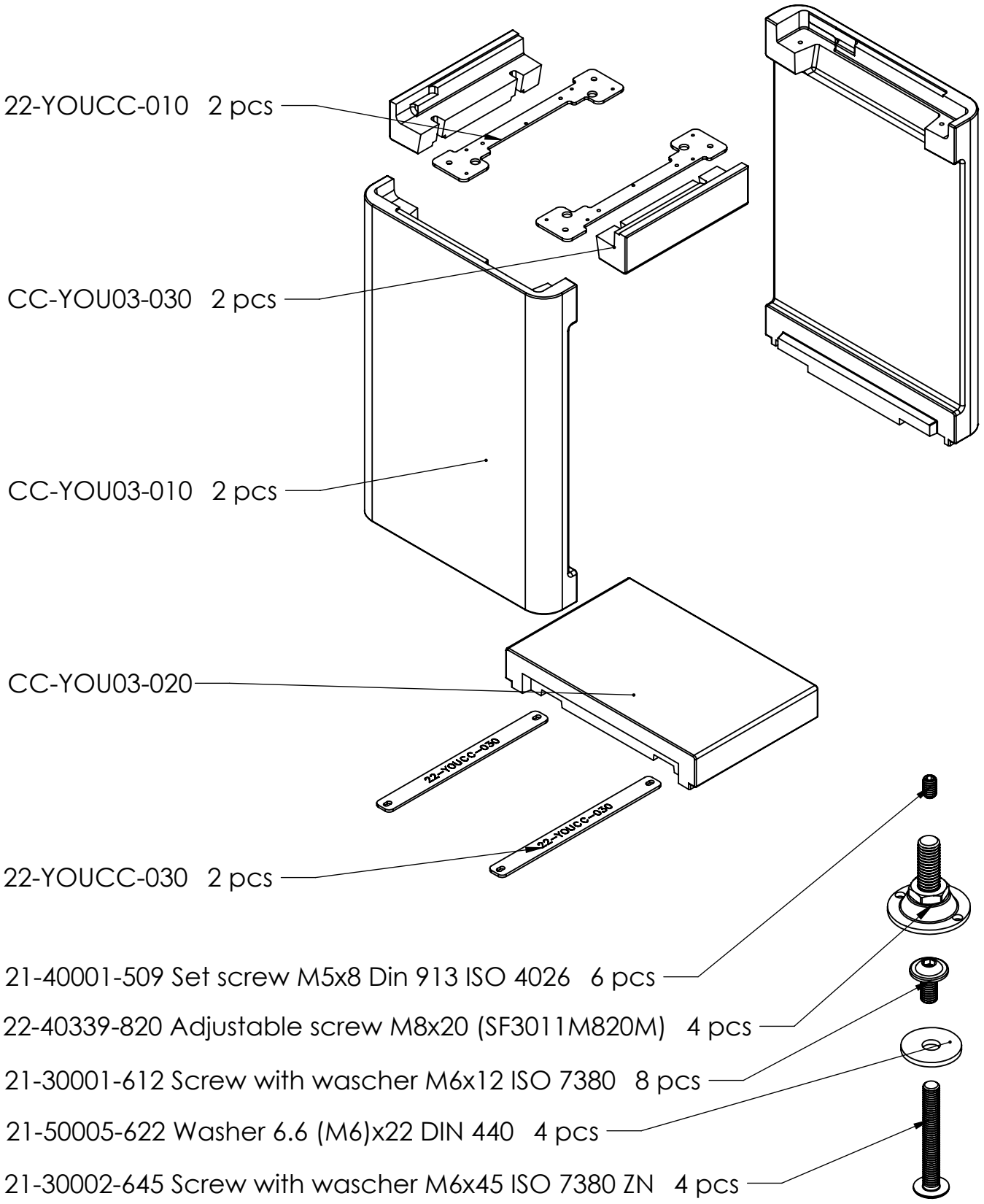

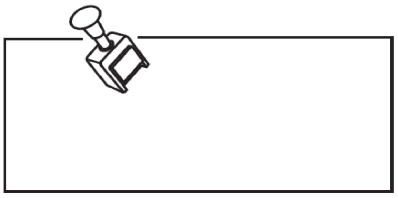

VERSION: **Q0**