Table of delivery

Nordpeis

FP-GEN0P-100 Geneve P Low

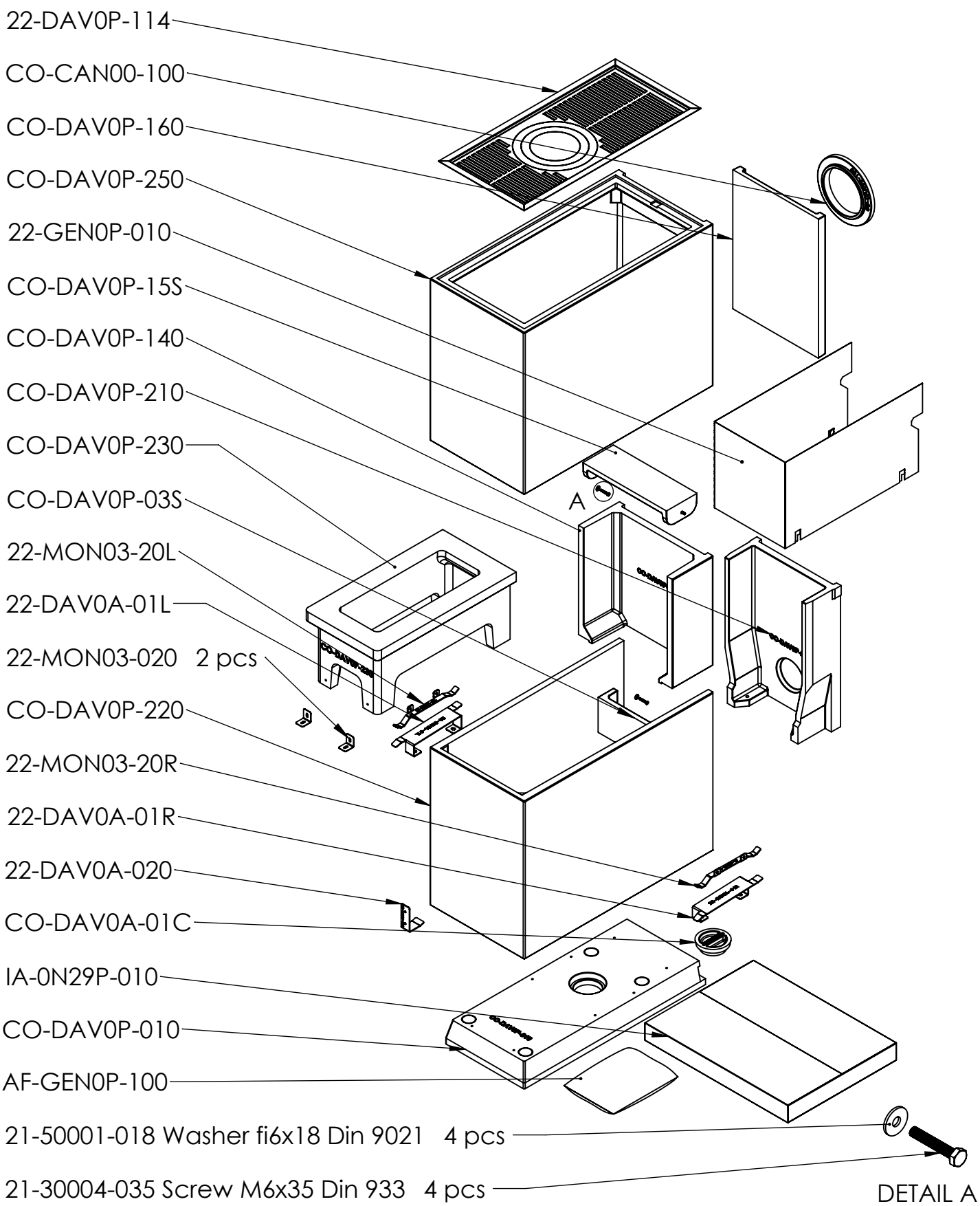

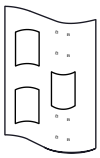

Instruction
24-GEN0P-100

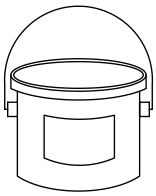

AF-00035-001

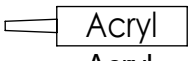

Acryl
23-00080-000

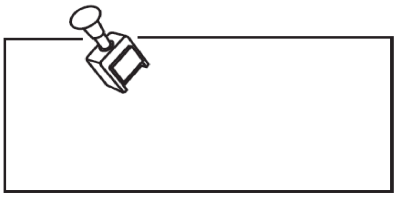

VERSION: **Q0**