Table of delivery

Nordpeis

FP-MON04-300 Monaco II Low with Colorado bench

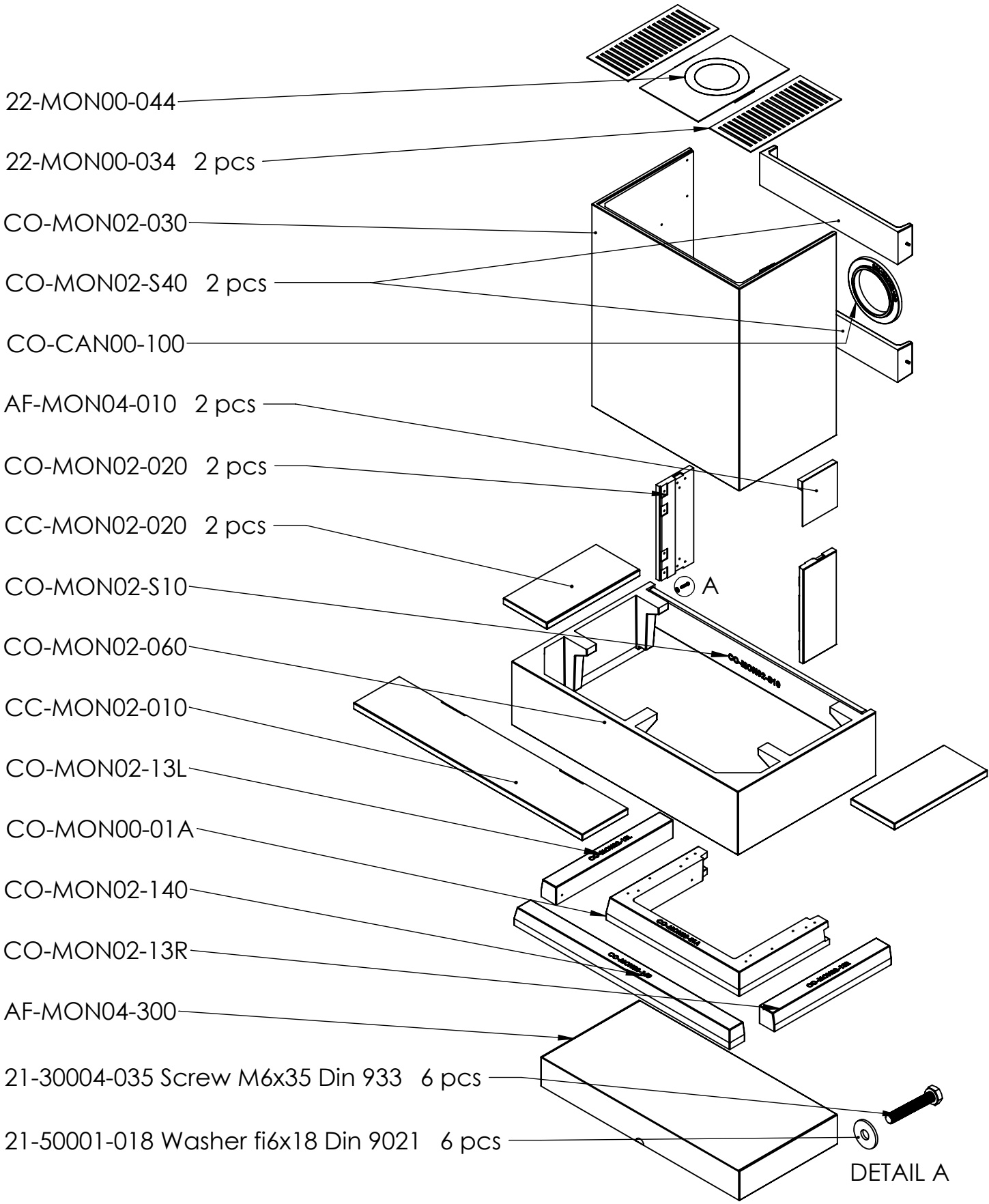

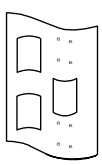

Instruction
24-MON04-300

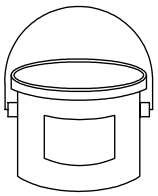

AF-00035-001

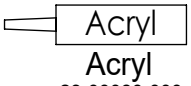

Acryl
23-00080-000

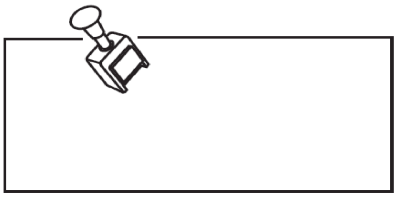

VERSION: **Q1**